CHF (Ferroresonant) L-828 / L-829 Constant Current Regulator

with Universal Regulator Controller (URC)

Air-Cooled, 4-70kW, 6.6A / 20A

User Manual

96A0408

Retain for future use.

Rev. D, 6/9/11
ETL Certified to FAA Specification 150/5345-10

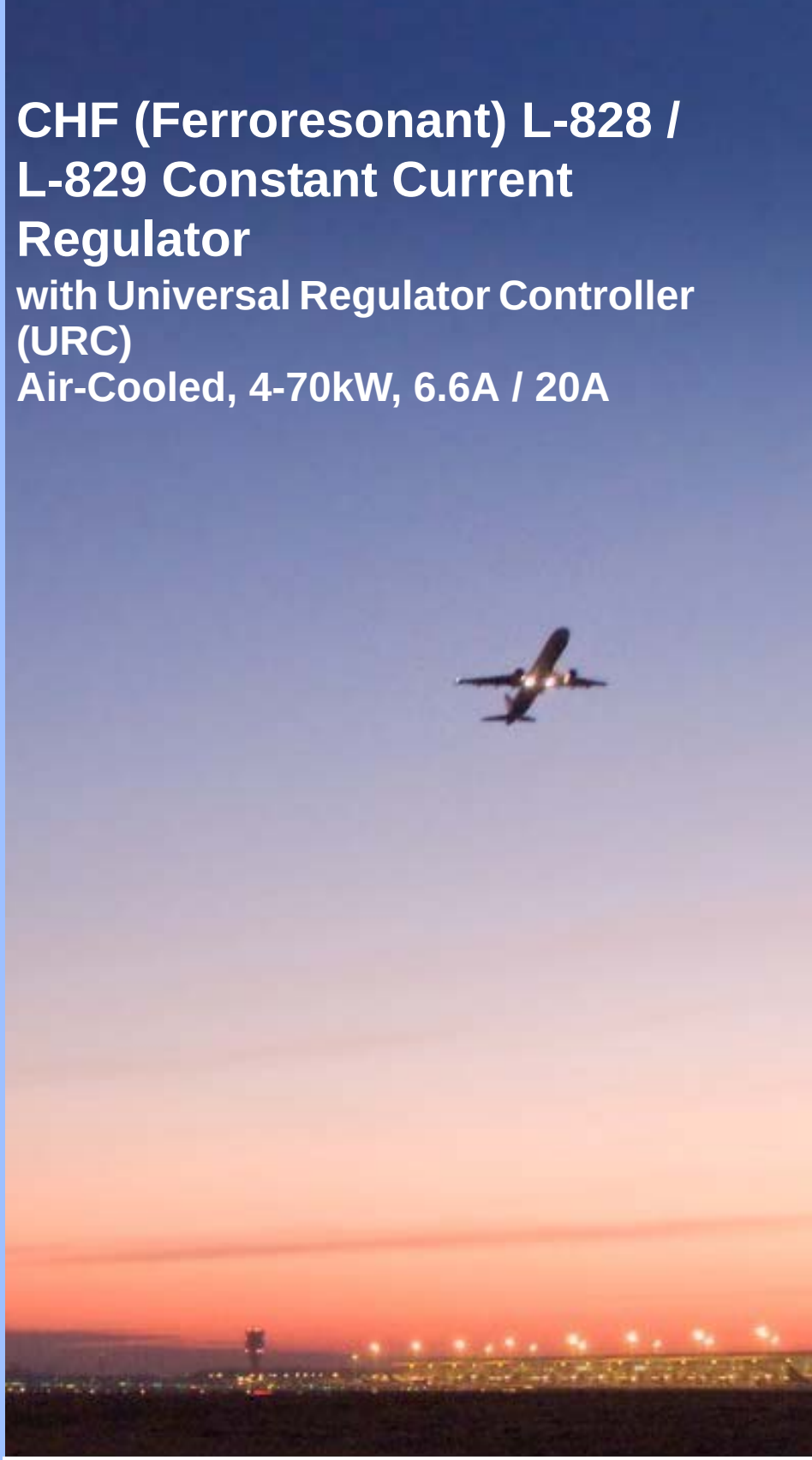

ADB
Airfield Solutions

Disclaimer

This manual could contain technical inaccuracies or typographical errors. ADB Airfield Solutions reserves the right to revise this manual from time to time in the contents thereof without obligation of ADB Airfield Solutions to notify any person of such revision or change.

Details and values given in this manual have been compiled with care. They are not binding, however, and ADB Airfield Solutions disclaims any liability for damages or detriments suffered as a result of reliance on the information given herein or the use of products, processes or equipment to which this manual refers. No warranty is made that the use of the information or of the products, processes or equipment to which this manual refers will not infringe any third party's patents or rights.

Warranties

Products of ADB Airfield Solutions manufacturer are guaranteed against mechanical, electrical, and physical defects (excluding lamps) for a period of one year from the date of installation or a maximum of 18 months from date of shipment and are guaranteed to be merchantable and fit for the ordinary purposes for which such products are made.

ADB Airfield Solutions will correct by repair or replacement, at its option, equipment or parts which fail because of mechanical, electrical or physical defects, provided that the goods have been properly handled and stored prior to installation, properly installed and properly operated after installation, and provided further that Buyer gives ADB Airfield Solutions written notice of such defects after delivery of the goods to Buyer. Refer to the Safety section for more information on Material Handling Precautions and Storage precautions that must be followed.

ADB Airfield Solutions reserves the right to examine goods upon which a claim is made. Said goods must be presented in the same condition as when the defect therein was discovered. ADB Airfield Solutions furthers reserves the right to require the return of such goods to establish any claim.

ADB Airfield Solutions' obligation under this guarantee is limited to making repair or replacement within a reasonable time after receipt of such written notice and does not include any other costs such as the cost of removal of defective part, installation of repaired product, labor or consequential damages of any kind, the exclusive remedy being to require such new parts to be furnished.

ADB Airfield Solutions' liability under no circumstances will exceed the contract price of goods claimed to be defective. Any returns under this guarantee are to be on a transportation charges prepaid basis. For products not manufactured by, but sold by ADB Airfield Solutions, warranty is limited to that extended by the original manufacturer.

This is ADB Airfield Solutions' sole guarantee and warranty with respect to the goods; there are no express warranties or warranties of fitness for any particular purpose or any implied warranties of fitness for any particular purpose or any implied warranties other than those made expressly herein. All such warranties being expressly disclaimed.

Trademarks

General notice: other product names used here are for identification purposes only and may be trademarks of their respective companies.

Proprietary Information

This information carrier contains proprietary information, which shall not be used for other purposes than those for which it has been released, nor be reproduced or disclosed to third parties without the prior written consent of ADB Airfield Solutions.

No part of this publication may be reproduced, stored in a retrieval system, or transmitted in any form or by any means, mechanical, photocopy, recording, or otherwise, without the prior written permission of ADB Airfield Solutions. No patent liability is assumed with respect to the use of the information contained herein. Neither is any liability assumed for damages resulting from the use of the information contained herein.

ADB Airfield Solutions shall not be liable to the purchaser of this product or third parties for damages, losses, costs, or expenses incurred by purchaser or third parties as a result of accident, misuse, or abuse of this product or unauthorized modifications, repairs, or alterations to this product. ADB Airfield Solutions shall not be liable against any damages arising from the use of any options or parts other than those designated as approved products.

Copyright © 2010 by ADB Airfield Solutions. All rights reserved.

 © 2010 ADB Airfield Solutions All Rights Reserved

TABLE OF CONTENTS

CHF (Ferroresonant) L-828 / L-829 Constant Current Regulator i

1.0: Safety 1

1.1 :To use this equipment safely 1
1.1.1 :Additional Reference Materials 1
1.1.2 :Qualified Personnel 1
1.1.3 :Intended Use 1
1.1.4 :Storage 1
1.1.4.1 :Operation 2
1.1.4.2 :Material Handling Precautions 2
1.1.4.3 :Action in the Event of a System or Component Malfunction 2
1.1.4.4 :Maintenance and Repair 2
1.1.4.5 :Operation of Overloaded Regulators 2

2.0: Introduction 3

2.1 :About this manual 3
2.1.1 :How to work with the manual 3
2.1.2 :Record of changes 3
2.2 :Product Introduction 4
2.3 :Compliance with Standards 4
2.4 :Features 4
2.5 :Electrical Supply 5
2.5.1 :Remote Control 5
2.5.2 :Total Harmonic Distortion* (THD) 5
2.5.3 :Theory of Operation Introduction 5
2.6 :ACE2 Unit 5
2.7 :Environmental Operating Conditions 6
2.7.1 :Monitoring Option 6
2.7.2 :Application Notes 6
2.8 :Theory of Operation 8
2.8.1 :Power Circuit 8
2.8.2 :Output Measurement 8
2.8.3 :Universal Regulator Controller (URC) 8
2.8.3.1 :URC PCB Inputs/Outputs 8
2.8.4 :Output Current Monitor Circuitry 9
2.8.5 :Local Control Position Detection 9
2.8.6 :Contactor Drive 9
2.8.7 :Remote Control Position Detection 9
2.8.8 :Fault Protection 9
2.9 :L-828 CCR 10
2.10 :L-829 CCR 11
2.11 :SGRS Powerpack™ 11
2.12 :Universal Regulator Controller 13
2.12.1 :L-829 Advanced Control Equipment (ACE or ACE2) 13
2.13 :L-828/L-829 CCR Monitoring Options 14
2.13.1 :Optional Insulation Resistance Monitoring System 14
2.13.2 :Optional Scanning Monitor Interface 14
2.13.3 :Optional Scanning Monitor Ready 14
2.14 :Optional Series Cutout Type SCO 14
2.15 :L-828 CCRs (4-70 kW 6.6 A/ 20 A): Required Equipment 14
2.16 :Input Wire Size 15
2.17 :Input Power Breaker Sizing 15
2.18 :Specifications 16
2.18.1 :Efficiency 16

Table of Contents

© 2010 ADB Airfield Solutions All Rights Reserved

Table of Contents

2.18.2 :Reactive Loading 16
2.18.3 :Resistive Loading 16
2.18.4 :Regulation 17
2.18.5 :Environmental Operating Conditions 17
2.18.6 :Protection Devices 17
2.18.6.1 :Open-Circuit Protection 17
2.18.6.2 :Overcurrent Protection 17
2.18.7 :Input Voltage 17
2.18.7.1 :Built-In True-rms-Reading Ammeter, L-828 only 17
2.18.7.2 :Rating and Input Voltage.... 17
2.18.8 :Temperature Rise 17
2.19 :Dimensions 18

3.0: Installation 21

3.1 :Unpacking 21
3.2 :Installation 21
3.2.1 :Wiring Connections and Startup 21
3.3 :Stacking CCR's (Optional) 24
3.4 :SGRS Style Powerpacks (Optional) 27
3.5 :Frames 28

4.0: Operation 29

4.1 :Introduction 29
4.2 :CCR Control Procedures 29
4.2.1 :Local Control 29
4.2.2 :Remote Control 30
4.3 :CCR Door Interlock (Optional) 30
4.4 :CCR Shutdown Procedure 30
4.5 :CCR Adjustment Procedures 30
4.5.1 :Output Current Adjustment 31
4.5.2 :Overcurrent Adjustment 32
4.6 :SCO Cutout Working Positions 33
4.7 :Application Notes 35
4.8 :Digital Power Meter Calibration (optional) 36
4.8.1 :Display 36
4.8.2 :Function Buttons 36
4.8.3 :DPM Displays 36
4.8.4 :Calibration Procedure 37

5.0: Maintenance and Repair 41

5.1 :Maintenance Schedule 41
5.1.1 :Short-Circuit Test 42
5.1.2 :Open-Circuit Test 42
5.2 :Troubleshooting 43
5.2.1 :Preliminary Troubleshooting 43
5.2.2 :Troubleshooting Fuses 44
5.2.3 :L-828 General Troubleshooting 51
5.3 :Additional L-829 General Troubleshooting Procedures 52
5.4 :Component Replacement Procedures 53
5.4.1 :Removing and Replacing URC PCB 53
5.4.2 :Removing and Replacing Dual SCR Module Assembly 53
5.4.3 :Removing and Replacing Contactor 55
5.4.4 :Removing and Replacing Input Lightning Arrestors (front of Component Mounting Plate) 56

© 2010 ADB Airfield Solutions All Rights Reserved

5.4.5 :Removing and Replacing Output Lightning Arrestors (front of Component Mounting Plate) 56

6.0: Parts and Mechanical Drawings 57

7.0: Wiring Schematics 65

Document Date (12/2010) 74

© 2010 ADB Airfield Solutions All Rights Reserved

© 2010 ADB Airfield Solutions All Rights Reserved

1.0 Safety

This section contains general safety instructions for installing and using ADB Airfield Solutions equipment. Some safety instructions may not apply to the equipment in this manual. Task- and equipment-specific warnings are included in other sections of this manual where appropriate.

1.1 To use this equipment safely

WARNING

Read installation instructions in their entirety before starting installation.

- Refer to the FAA Advisory Circular AC 150/5340-26, Maintenance of Airport Visual Aids Facilities, for instructions on safety precautions.
- Observe all safety regulations. To avoid injuries, always disconnect power before making any wiring connections or touching any parts. Refer to FAA Advisory Circular AC 150/5340-26.
- Become familiar with the general safety instructions in this section of the manual before installing, operating, maintaining or repairing this equipment.
- Read and carefully follow the instructions throughout this manual for performing specific tasks and working with specific equipment.
- Make this manual available to personnel installing, operating, maintaining or repairing this equipment.
- Follow all applicable safety procedures required by your company, industry standards and government or other regulatory agencies.
- Install all electrical connections to local code.
- Use only electrical wire of sufficient gauge and insulation to handle the rated current demand. All wiring must meet local codes.
- Route electrical wiring along a protected path. Make sure they will not be damaged by moving equipment.
- Protect components from damage, wear, and harsh environment conditions.
- Allow ample room for maintenance, panel accessibility, and cover removal.
- Protect components from damage, wear, and harsh environment conditions.
- Allow ample room for maintenance, panel accessibility, and cover removal.
- Protect equipment with safety devices as specified by applicable safety regulations.
- If safety devices must be removed for installation, install them immediately after the work is completed and check them for proper functioning prior to returning power to the circuit.

1.1.1 Additional Reference Materials

- NFPA 70B, Electrical Equipment Maintenance.
- NFPA 70E, Electrical Safety Requirements for Employee Workplaces.
- ANSI/NFPA 79, Electrical Standards for Metalworking Machine Tools.
- OSHA 29 CFR, Part 1910, Occupational Health and Safety Standards.
- National and local electrical codes and standards.

1.1.2 Qualified Personnel

The term **qualified personnel** is defined here as individuals who thoroughly understand the equipment and its safe operation, maintenance and repair. Qualified personnel are physically capable of performing the required tasks, familiar with all relevant safety rules and regulations and have been trained to safely install, operate, maintain and repair the equipment. It is the responsibility of the company operating this equipment to ensure that its personnel meet these requirements.

Always use required personal protective equipment (PPE) and follow safe electrical work practices.

1.1.3 Intended Use

WARNING

Using this equipment in ways other than described in this manual may result in personal injury, death or property and equipment damage. Use this equipment only as described in this manual.

ADB Airfield Solutions cannot be responsible for injuries or damages resulting from nonstandard, unintended applications of its equipment. This equipment is designed and intended only for the purpose described in this manual. Uses not described in this manual are considered unintended uses and may result in serious personal injury, death or property and equipment damage. Unintended uses may result from taking the following actions:

- Making changes to equipment that are not recommended or described in this manual or using parts that are not genuine ADB Airfield Solutions replacement parts.
- Failing to make sure that auxiliary equipment complies with approval-agency requirements, local codes and all applicable safety standards.
- Using materials or auxiliary equipment that are inappropriate or incompatible with ADB Airfield Solutions equipment.
- Allowing unqualified personnel to perform any task.

1.1.4 Storage

CAUTION

If equipment is to be stored prior to installation, it must be protected from the weather and kept free of condensation and dust.

Failure to follow this instruction can result in injury or equipment damage.

© 2010 ADB Airfield Solutions All Rights Reserved

Safety

1.1.4.1 Operation

WARNING

- Only qualified personnel, physically capable of operating the equipment and with no impairments in their judgment or reaction times, should operate this equipment.
- Read all system component manuals before operating this equipment. A thorough understanding of system components and their operation will help you operate the system safely and efficiently.
- Before starting this equipment, check all safety interlocks, fire-detection systems, and protective devices such as panels and covers. Make sure all devices are fully functional. Do not operate the system if these devices are not working properly. Do not deactivate or bypass automatic safety interlocks or locked-out electrical disconnects or pneumatic valves.
- Protect equipment with safety devices as specified by applicable safety regulations.
- If safety devices must be removed for installation, install them immediately after the work is completed and check them for proper functioning.
- Route electrical wiring along a protected path. Make sure they will not be damaged by moving equipment.
- Never operate equipment with a known malfunction.
- Do not attempt to operate or service electrical equipment if standing water is present.
- Use this equipment only in the environments for which it is rated. Do not operate this equipment in humid, flammable, or explosive environments unless it has been rated for safe operation in these environments.
- Never touch exposed electrical connections on equipment while the power is ON.

1.1.4.2 Material Handling Precautions

CAUTION

This equipment may contain electrostatic sensitive devices.

- Protect from electrostatic discharge.
- Electronic modules and components should be touched only when this is unavoidable e.g. soldering, replacement.
- Before touching any component of the cabinet you should bring your body to the same potential as the cabinet by touching a conductive earthed part of the cabinet.
- Electronic modules or components must not be brought in contact with highly insulating materials such as plastic sheets, synthetic fiber clothing. They must be laid down on conductive surfaces.
- The tip of the soldering iron must be grounded.
- Electronic modules and components must be stored and transported in conductive packing.

1.1.4.3 Action in the Event of a System or Component Malfunction

WARNING

- Do not operate a system that contains malfunctioning components. If a component malfunctions, turn the system OFF immediately.
- Disconnect and lock out electrical power.
- Allow only qualified personnel to make repairs. Repair or replace the malfunctioning component according to instructions provided in its manual.

1.1.4.4 Maintenance and Repair

WARNING

Allow only qualified personnel to perform maintenance, troubleshooting, and repair tasks.

- Only persons who are properly trained and familiar with ADB Airfield Solutions equipment are permitted to service this equipment.
- Disconnect and lock out electrical power.
- Always use safety devices when working on this equipment.
- Follow the recommended maintenance procedures in the product manuals.
- Do not service or adjust any equipment unless another person trained in first aid and CPR is present.
- Connect all disconnected equipment ground cables and wires after servicing equipment. Ground all conductive equipment.
- Use only approved ADB Airfield Solutions replacement parts. Using unapproved parts or making unapproved modifications to equipment may void agency approvals and create safety hazards.
- Check interlock systems periodically to ensure their effectiveness.
- Do not attempt to service electrical equipment if standing water is present. Use caution when servicing electrical equipment in a high-humidity environment.
- Use tools with insulated handles when working with electrical equipment.

1.1.4.5 Operation of Overloaded Regulators

WARNING

- Operation of a Regulator while overloaded at any step may result in equipment failure or equipment damage.

© 2010 ADB Airfield Solutions All Rights Reserved

2.0 Introduction

CCF (Ferroresonant) L-828 / L-829 Constant Current Regulator with Universal Regulator Controller (URC)

2.1 About this manual

The manual shows the information necessary to:

- Install
- Carry Out Maintenance
- Carry Out Troubleshooting

on the CCF (Ferroresonant) L-828 / L-829 Constant Current Regulator, in the manual referred to as the equipment.

2.1.1 How to work with the manual

1. Familiarize yourself with the structure and content.
2. Carry out the actions completely and in the given sequence.

2.1.2 Record of changes

PAGE	REV	DESCRIPTION	EC NO.	CHECKED	APPROVED	DATE
	A	New manual			JC	10/05/09
	C	Full update			JC	12/16/10
All	D	Updated fuses and added capacitor plate info	3285	RH	JC	06/09/11

© 2010 ADB Airfield Solutions All Rights Reserved

2.2 Product Introduction

WARNING
Read the instructions in their entirety before starting installation.

This section describes the ADB Airfield Solutions *Signature Series* Ferroresonant, L-828/L-829, constant current regulators (CCRs). These CCRs are manufactured according FAA specification AC 150/5345-10 (latest edition).

2.3 Compliance with Standards

FAA:

L-828/L-829 AC 150/5345-10 (Current Edition) ETL Certified

ICAO:

Aerodrome Design Manual Part 5, para. 3.2.1.4 to 3.2.1.6

Military:

UFC 3-535-01; NAVAIR 51-50AAA-2

Uses

Supplies three or five precision output levels to power series lighting circuits on airport runways and taxiways.

2.4 Features

- Advanced CCR architecture combines the performance advantages of both saturable reactor and Ferroresonant technologies. Produces minimal EMI, high efficiency, and near unity power factor for AC 150/5345-10 test conditions, exceeding FAA and military requirements for power factor and efficiency. Unique CCR design has excellent input power factor and efficiency at all intensity steps and lower loads.
- Does not exceed the conducted power line emission limits given in Table 4 of AC 150/5345-10 (latest edition) with testing as specified by the Federal Communications Commision (FCC) in the Code of Federal Regulations (CFR) Title 47, Subpart B, Section 15.107b. Does not exceed the radiated emission limits given in Table 5 of AC 150/ 5345-10 with testing as specified in the Code of Federal Regulations (CFR) Title 47, Subpart B, Section 15.109b.
- Optional integrated ACE^{TM} unit provides state-of-the-art remote control and L-829 monitoring capability. Unique “cycle” mode allows display of True-RMS current and voltage, VA, watts, lamps-out, and series circuit insulation resistance value to be alternately displayed. A visual indication is also provided for all other FAA-monitored parameters, including open circuit, overcurrent, loss of input power, loss of input voltage, low VA (drop in load VA of 10%), Remote/Local status, and incorrect output current.
- No input turn on in-rush current surge.
- To minimize the floor space required in a vault, ADB 4-30kW regulators can be stacked using a stacking kit. See Kits section for details.
- Available in two classes and styles:
  Class 1 = 6.6A maximum output current (4-30kW only.)
  Class 2 = 20A maximum output current (15-70kW only)
  Style 1 = 3 Brightness Steps
  Style 2 = 5 Brightness Steps
- If input power loss occurs, operation will resume within five seconds after restoration of input power.
- Brightness Steps can be changed in the field (between 3 and 5 Steps). New label required.
- Field upgradable from L-828 to L-829 with ACE unit.
- Industrial powder coat finish.
- Input lightning protection and output lightning protection included.

© 2010 ADB Airfield Solutions All Rights Reserved

2.5 Electrical Supply

Power Input: 60Hz, single-phase, available in 208, 220, 240, 347and 480 Vac

Power Factor*: 0.99 or more for 4 to 30kW
0.95 or more for 50 and 70kW

NOTE: Efficiency
90% minimum for 4 to 20kW
92% minimum for 30kW
93% minimum for 50kW
94% minimum for 70kW

2.5.1 Remote Control

120V AC, 60Hz or +48V DC, ±10%

2.5.2 Total Harmonic Distortion* (THD)

Current THD: 10% maximum in highest step

Voltage THD: 1.9% maximum in all steps

* Tested with 100% resistive load according to FAA AC150/5345-10 (Latest Edition).

2.5.3 Theory of Operation Introduction

Ferroresonant circuitry and a solid-state control system accurately regulate the output current to within the FAA-allowable range from no load to full load and with input voltage variations of -5% to +10% of nominal.

For more theory of operation see: “Theory of Operation” on page 8.

2.6 ACE2 Unit

The ACE2™ unit provides L-829 monitoring and optional megging or CCR input monitoring capability. Each unit is installed locally at each CCR that requires remote control and/or monitoring within the airfield lighting electrical vault. Optional CCR input monitoring monitors the following:

- CCR input current
- CCR input voltage
- CCR input volt-amps (VA)
- CCR input power (watts)
- CCR input power factor
- CCR % efficiency

The ACE2 unit is also a component of ADB’s distributed control and monitoring system. Each unit can be easily connected to an Airport Lighting Control & Monitoring System (ALCMS) by simply adding redundant communication wires. See ADB ACE2 catalog sheet 2084 for additional information.

© 2010 ADB Airfield Solutions All Rights Reserved

Introduction

2.7 Environmental Operating Conditions

- Temperature: -40°C to +55°C (-40°F to +131°F)
- Humidity: 10 to 95%
- Altitude: 0 to 6,600 ft (2,000 m)

2.7.1 Monitoring Option

See Figure 1

Figure 1: CHF Ordeing Codes

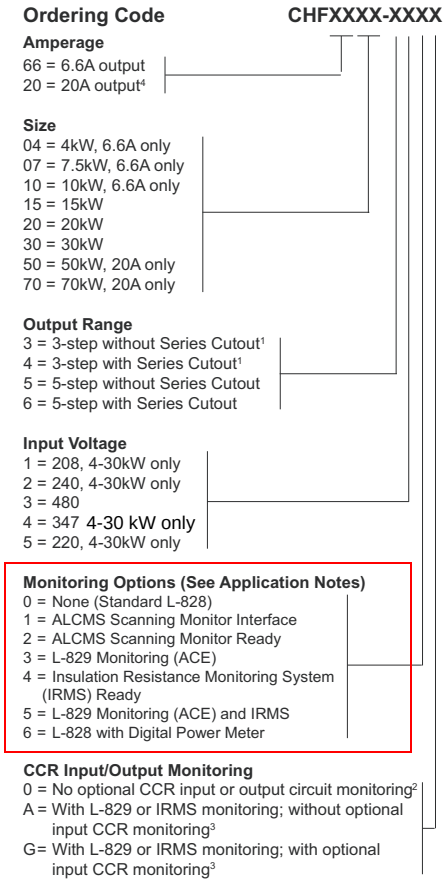

Footnotes:

1. A Ferroresonant CCR is preferred for airports that require low output harmonic content (EMI) or that have varying loads, such as Runway Guard Lights using incandescent (tungsten-halogen) lamps,
   L-849 REILs using xenon fl ash lamps, or Runway Status Lights (RWSL)
2. 3-step, 20A is not standard FAA operation. ADB Airfield Solutions can offer a non-ETL Certified Style 1, Class 2 CCR for dedicated 5.5A sign circuits or other needs. Please contact the ADB Sales Department for more details.
3. Used only with Monitoring Options 0, 1, 2, and 6.
4. Used only with Monitoring Options 3 and 5.
5. 20A is only ETL Certified in 50kW and 70kW.

2.7.2 Application Notes

0 None Standard

L-828 supplied with analog ammeter

1 ALCMS Scanning Monitor Interface (SMI)

The SMI option adds Primary Power and Remote/Local monitoring relays. Dry relay Interface contacts are connected to a dedicated terminal block for each monitored point. Typical application: connecting ADB L-828 CCR to ALCMS or L-827 that is manufactured by others. Note that this option does not provide dedicated output current or voltage transformers.

© 2010 ADB Airfield Solutions All Rights Reserved

2 ALCMS Scanning Monitor Ready (SMR)

The SMR option adds several monitoring relays (including Primary Power and Remote/Local) and also CCR output current and voltage transformers. All monitored signals are connected to a dedicated terminal block. Application only for connecting ADB L-828 CCR to older ADB Gen I/II ALCMS scanning monitoring system.

3 L-829 Monitoring (ACE™)

Includes FAA L-829 monitoring equipment.

If application is for connection to ADB L-890 **ALCMS**: Add a “/A” to end of Ordering Code. The ACE unit will then be programmed to provide monitoring data via dual redundant communication links. If application is for a stand-alone L-829 CCR: Ordering Code is not changed. The ACE unit is programmed to activate a dry contact closure if a fault is present. The fault alarm can then be connected to any external monitoring system.

4 Insulation Resistance Monitoring System (IRMS) Ready

This option adds an IRMS board in the CCR. Application: connection to externally mounted ADB ACE unit.

5 L-829 Monitoring (ACE) Includes FAA L-829 and IRMS equipment and IRMS

- If application is for connection to ADB L-890 **ALCMS**: Add a “/A” to end of Ordering Code. The ACE unit will then be programmed to provide monitoring data via dualredundant communication links.
- If application is for a stand-alone L-829 CCR with Insulation Resistance Monitoring: Ordering Code is not changed. The ACE unit is programmed to activate a dry contact closure if a fault is present. The fault alarm can then be connected to any external monitoring system.

6 L-828 with Digital Power Meter

This option replaces the analog ammeter with a Digital Power Meter. The Digital Power Meter is used on L-828 CCRs to indicate True RMS output current, voltage, VA, and watts. It can also be set to activate an alarm if there is a 10% or 15% drop in the load (Low VA).

© 2010 ADB Airfield Solutions All Rights Reserved

2.8 Theory of Operation

This subsection describes the L-828 CCR theory of operation.

2.8.1 Power Circuit

See Figure 2. A Ferroresonant network consisting of T1, C1, and the SCRs draws from the input lines. This network is capable of drawing a limited amount of power. It can be routed to one of two places. The first is the output leads to the airfield. The second is a resonant tank comprised of C1 and part of T1.

As more power is allowed to flow into the resonant tank, less is available to flow to the field. It is by regulating the current in this tank that the SCRs regulate throughput current to the airfield. It is important to note that the output of the regulator will be the smallest when the SCRs are conducting 100% of the time. This is the opposite of what is seen in simple SCR regulators where the SCRs are used to directly control the output of the regulator.

NOTE: C1 is actually a bank of capacitors located near T1.

The components of the Ferroresonant network are designed to deliver an output current slightly higher than 6.6 A/20 A for the minimum input voltage, while the SCRs are fully off.

2.8.2 Output Measurement

The output current flows through the high voltage current transformer T5. T5 provides feedback to the URC board on the actual current output to the airfield series circuit.

A second current transformer, T2, provides current to a true-rms-reading ammeter mounted onto the front panel to indicate output current.

2.8.3 Universal Regulator Controller (URC)

See Figure 6. This subsection describes the board level circuitry found on the universal regulator controller.

Figure 2: L-828 CCR Power Circuit Block Diagram

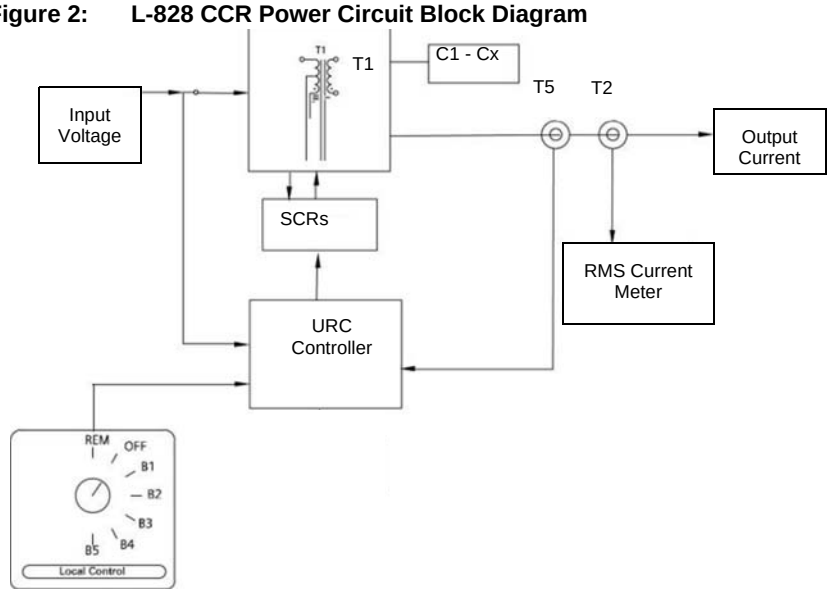

2.8.3.1 URC PCB Inputs/Outputs

The URC receives the inputs listed below. See Figure 6 in this section and “Wiring Schematics” on page 65.

- Local control signals from the front panel rotary switch.
- Remote control signals from a remote control terminal block located in the L-828 chassis (120Vac/48Vdc) (TB1).
- A current proportional to the output current from a current transformer (T5).
- Phase angle reference voltage derived from the input voltage.
- 24 Vac center tapped supply voltage from T4.
- The URC provides the outputs listed below.
- A contact to complete the input contactor K1 coil circuit.
- A contact to enable the Remote CCI voltage at TB1.

 © 2010 ADB Airfield Solutions All Rights Reserved

- Gate drive signals to the SCR block used to regulate the output current.

2.8.4 Output Current Monitor Circuitry

The system output current is sensed by a current transformer (T5) whose secondary is connected to J8-3 and J8-4 on the URC board. This current signal is passed through a 15-ohm shunt resistor (R38), located on the URC board. For the 6.6 amp regulator, T5 provides a 100:1 step-down of the feedback current. For 20 A regulators, this ratio is 300:1. Output current steps 1-5 would correspond to voltage levels of 420, 510, 615, 780, and 990 millivolts respectively.

2.8.5 Local Control Position Detection

Local control position detection is accomplished by using a rotary switch mounted on the front door of the CCR. See Figure 3.

2.8.6 Contactor Drive

The contactor drive circuit on the URC PCB pulls in the main contactor K2 by shorting points J4-2 to J4-4.

2.8.7 Remote Control Position Detection

When the local control signal to the micro-controller indicates “remote” the remote control circuitry is active. Relay K1 on the URC board closes, providing 120VAC to the CCI connection on TB2. The remote control inputs incorporate surge suppression and are optically isolated from the rest of the PCB.

2.8.8 Fault Protection

This subsection describes URC fault protection.

Overcurrent Protection

The micro-controller detects an over current condition by comparing the output current to a preset value. If the output current exceeds this value the controller will shut the regulator down by removing drive to the input contactor. This contactor will remain de-energized until the controller is reset either by selecting the OFF position (remotely or locally) or cycling the input power off for a minimum of 2 seconds and then back on. The control board will not recognize momentary over currents caused by load switching or other transient conditions.

Open Circuit Protection

The micro-controller detects an open circuit by the absence of current in the regulator output (this will also detect an open or shorted current transformer). If the output current is less than 1.5 amps, the controller will shut the current regulator down within one second by removing drive to the input contactor. This contactor will remain de-energized until the controller is reset either by selecting the OFF position (remotely or locally) or cycling the input power off for a minimum of 2 seconds and then back on.

© 2010 ADB Airfield Solutions All Rights Reserved

2.9 L-828 CCR

See Figure 3. This subsection describes the L-828 CCR. The L-828 uses a Universal Regulator Controller (URC) to provide regulator and control functions.

NOTE: Figure 3 shows a Ferroresonant 15 kW/6.6 A L-828 CCR. The other L-828 CCRs (4, 7.5, 10, 20-30 kW/6.6 A/20 A and 50/70kW) may differ in size and appearance.

Figure 3: L-828 CCR (4 -30kW/6.6 A)

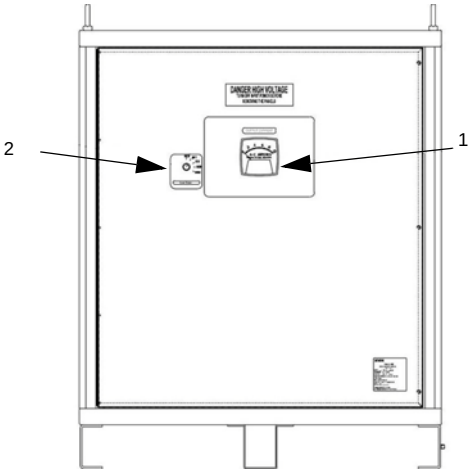

1 Ammeter (shown) or Digital Power Meter
2 Rotary Switch

The L-828 CCRs are designed to:

- Supply three or five precision output current levels (6.6 A/20 A maximum) to power airport series lighting circuits on runways and taxiways.
- Accurately regulate the output current to within ±1% of the adjustable nominal levels from no load to full load and with input voltage variations of -5% to +10% of nominal.
- Maintain the nominal output current levels even when 30 percent of the isolation transformers in the series lighting circuit supplied by the regulator have open secondaries.

 © 2010 ADB Airfield Solutions All Rights Reserved

2.10 L-829 CCR

See Figure 4. This subsection describes the L-829 CCR. The L-829 uses a URC to provide regulator and control functions. It also uses the Advanced Control Equipment (ACE™ or ACE2™) for control and monitoring functions.

NOTE: Figure 4 shows a L-829 (15 kW/6.6 A) CCR. The other L-829 CCRs (4, 7.5, 10, 20-30 kW/6.6 A/20 A & 50/70kW) may differ in size and appearance.

Figure 4: L-829 CCR with ACE2

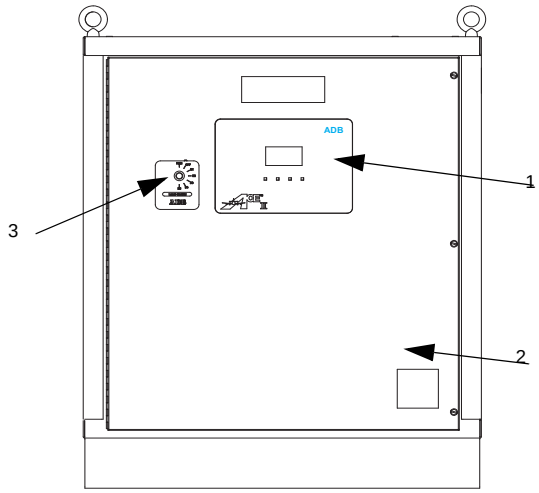

1 ACE2 Front Panel Display
2 L-829 CCR
3 Rotary Switch

2.11 SGRS Powerpack™

This subsection describes the Switchgear Regulator Style Powerpack. The SGRS Powerpack operates similar to the stand-alone type L-828 / L-829 and uses a URC to provide regulator and control functions. It also uses the Advanced Control Equipment (ACE™ or ACE2™) for control and monitoring functions.

The main difference is the CCR frame which is designed to insert into a SGRS line-up.

NOTE: Figure 5 shows a Ferroresonant L-829 (30 kW/6.6 A) CCR. The other L-829 CCRs (4, 7.5, 10, 15, 20 kW/6.6 A/20 A and 50/70kW) may differ in size and appearance.

© 2010 ADB Airfield Solutions All Rights Reserved

Figure 5: SGRS Powerpack with ACE or ACE2

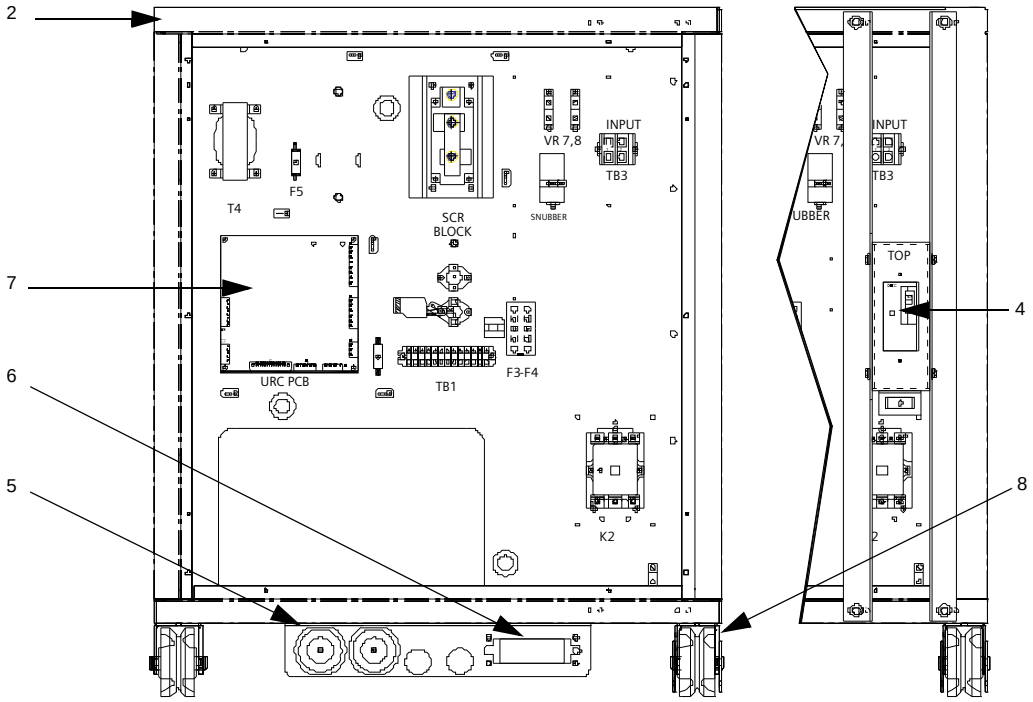

1. ACE – not shown (Installed on inside front of SGRS door)
2. SGRS Powerpack
3. Rotary Switch – (Installed on front of SGRS door)
4. Circuit Breaker
5. Series Circuit Stab Connector
6. Input Power and control wiring stab connector
7. URC Circuit Board
8. Roller Wheels

© 2010 ADB Airfield Solutions All Rights Reserved

2.12 Universal Regulator Controller

See Figure 6 below. The Universal Regulator Controller (URC) is a PC board that is designed to provide all regulator and control functions for Ferroresonant L-828/L-829 CCRs manufactured by ADB Airfield Solutions. This is accomplished with an 8-bit embedded microcontroller and interface circuitry contained on a single 8 x 8 inch (203 mm x 203 mm) through-hole type printed circuit board. The universal regulator controller PCB performs the functions listed below.

- Produces SCR drive signals in accordance with the desired output current setting.
- Detects an overcurrent, or open circuit, and switches the constant current regulator off.
- When in Remote mode, enables the CCI to provide 120 Vac at 50 W. The CCI is the Remote power control source.

Figure 6: Universal Regulator Controller (URC)

2.12.1 L-829 Advanced Control Equipment (ACE or ACE2)

See Figure 4 and Figure 7. The L-829 ACE™ (or ACE2™) control and monitoring unit consists of an integrated control unit that is interfaced to each CCR either internally or within a small external enclosure. The ACE printed circuit boards are mounted inside a small and rugged environmental enclosure that is directly attached to the door of the L-829 CCR. The ACE consists of microprocessor-based module(s) that processes communication, control commands, input/output interface, and failsafe functionality for controlled elements in the airfield lighting vault.

Figure 7: ACE2 Control Board

For more information about the ACE, see:

- Advanced Control Equipment (ACE) manual 96A0287 or the Advanced Control Equipment (ACE2) manual 96A0357.
- ACE Programming manual 96A0348.

Introduction

© 2010 ADB Airfield Solutions All Rights Reserved

2.13 L-828/L-829 CCR Monitoring Options

The L-829 CCR monitoring options include the Insulation Resistance Monitoring System (IRMS), Scanning Monitor Interface (SMI), and Scanning Monitor Ready (SMR).

2.13.1 Optional Insulation Resistance Monitoring System

The IRMS is used only on the L-829. It performs scheduled cable insulation resistance measurements and can also perform manually requested measurements. IRMS provides the ability for monitoring the long-term degradation of the airfield series circuit cabling and showing the results on the L-829 CCR front display panel.

WARNING

When servicing a regulator equipped with an IRMS module, be sure that power to the IRMS is disconnected before touching the IRMS board, or any of the high voltage components or wires.

2.13.2 Optional Scanning Monitor Interface

The scanning monitor interface is a relay assembly that can be mounted internally to the front panel of the CCR. The relay assembly consists of four relays and sockets. The relay assembly is used to generate feedback signals concerning the CCRs operation to the Remote Multiplexer. The relay assembly generates feed back for the following signals: Remote/local status, commanded ON status, regulator running status, and primary power status.

2.13.3 Optional Scanning Monitor Ready

The scanning monitor ready includes the scanning monitor interface plus one current transformer (CT) and one potential transformer (PT). It also has resistor loads, and a fuse in the potential transformer secondary. Differential signals presenting the actual series circuit voltage and current are transmitted to the scanning monitor system two-conductor shielded cables.

2.14 Optional Series Cutout Type SCO

The series cutout Type SCO is often used at airports having a large number of series circuits to isolate the series circuit from the CCR during maintenance or testing operations. It also allows manual measurement of resistance of the series circuit to ground without disconnecting the series cable. The SCO cutout has a nominal working voltage of 5 kV and a nominal carrying current capacity of 20 amps AC.

For more information refer to the SCO Cutout manual 96A0294.

2.15 L-828 CCRs (4-70 kW 6.6 A/ 20 A): Required Equipment

Refer to Table 1 for required equipment that is supplied.

Refer to Table 2 for required equipment that is not supplied.

Refer to “Parts and Mechanical Drawings” on page 57 for ordering information.

Table 1: Required Equipment Supplied

Description	Quantity
L-828/L-829 constant current regulator	As Req’d on Order
Instruction manual	1 per CCR on Order

Table 2: Required Equipment Not Supplied

Description	Quantity
Input power wire. Refer to Table 3.	As required
Remote control wire, AWG 18 minimum, AWG 14 maximum	As required
Ground wire, AWG 8 minimum (6.6 A); AWG 6 minimum (20 A)	As required
Output load wire, AWG 6 minimum, 5000 Vac, L-824 type (6.6 A); AWG 8 minimum (20 A)	As required
Shorting jumper wire, AWG 8 minimum	As required
Disconnect switch or main circuit breaker	1
Input lightning arrestors for input voltages greater than 480 Vac. Mounted external to CCR. **NOTE:** lightning arrestors are standard on the power input for voltages 480 Vac and less for all new CCRs	As required
Voltmeter, 60 Vdc full scale	1
Ammeter, true-rms-reading, 9 A maximum scale	1

© 2010 ADB Airfield Solutions All Rights Reserved

Description	Quantity
Inductive-type current probe	1
Ohmmeter	1
Mounting bolts, ½-13 x 1-1/2 in. long, ½ STD washers, and lockwashers	4

2.16 Input Wire Size

Table 3 refers to recommended input power supply wire size for each regulator power rating dependent on the input voltage. This recommendation is based on 75°C rated copper wire per NEC Table 310.16.

Table 3: Recommended Input Wiring Rating

Power Rating	208 Vac	220 Vac	240 Vac	347 Vac	480 Vac
4 kW	AWG 10	AWG 10	AWG 10*	AWG 12*	AWG 14
7.5 kW	AWG 6	AWG 8	AWG 8	AWG 8	AWG 10*
10 kW	AWG 4	AWG 6	AWG 6	AWG 8	AWG 10
15 kW	AWG 3	AWG 3	AWG 4	AWG 6	AWG 8
20 kW	AWG 2/0	AWG 1/0	AWG 2	AWG 4	AWG 6
30 kW	AWG 3/0	AWG 3/0	AWG 2/0	AWG 2	AWG 4
50 kW	Not applicable	Not applicable	Not applicable	Not applicable	AWG 1/0
70 kW	Not applicable	Not applicable	Not applicable	Not applicable	AWG 3/0

*Increased 1 wire size to comply with small conductor limits in NEC 240.4.D.

2.17 Input Power Breaker Sizing

It is recommended that the circuit breaker on the input power supply lines have a rating of 125% of the CCR's input current, as given in Table 4, unless local codes require a different rating technique. Refer to the CCR's nameplate for the kW rating and input voltage to determine the actual input current from Table 4. If no standard-size circuit breaker exists at the 125% value, use the next larger standard-size circuit breaker.

NOTE: The currents listed in Table 4 represent actual input currents assuming the worst case limits of AC 150/5345-10 for power factor, efficiency, and number of required lamps out.

Table 4: CCR Input Voltage and Current for the CCR Power Ratings

Power Rating	208 Vac	220 Vac	240 Vac	347 Vac	480 Vac
4 kW	27 A	26 A	24 A	16 A	12 A
7.5 kW	51 A	48 A	44 A	31 A	22 A
10 kW	68 A	65 A	59 A	41 A	30 A
15 kW	97 A	92 A	84 A	58 A	42 A
20 kW	129 A	122 A	112 A	78 A	56 A
30 kW	190 A	179 A	164 A	114 A	82 A
50 kW	Not applicable	Not applicable	Not applicable	Not applicable	136 A
70 kW	Not applicable	Not applicable	Not applicable	Not applicable	188 A

© 2010 ADB Airfield Solutions All Rights Reserved

2.18 Specifications

This subsection provides specifications for L-828/L-829 CCR (4-70 kW 6.6 A/20 A).

Table 5: Class, Style and Power Ratings

Class	L-828/L-829 CCR Max Output Current	Style	Brightness Steps	Nominal Output Current	Power Ratings
1	6.6 A	1	3	4.8 A, 5.5 A, 6.6 A	4, 7.5, 10, 15, 20 and 30 kW
		2	5	2.8 A, 3.4 A, 4.1 A, 5.2 A, 6.6 A	
2	20 A	2	5	8.5 A, 10.3 A, 12.4 A, 15.8 A, 20 A	15, 20, 30, 50 and 70 kW

Table 6: Power Factor

CCR	Power Factor
4 - 10 kW	0.90 minimum
15 -70 kW	0.95 minimum

2.18.1 Efficiency

The efficiency of the regulator operated with rated input voltage into a full load having unity power factor is not less than the value shown in Table 7.

Table 7: Efficiency

CCR	Efficiency
4-20 kW	0.90 minimum
30 kW	0.92 minimum
50 kW	0.93 minimum
70 kW	0.94 minimum

2.18.2 Reactive Loading

The CCR maintains the output current within the limits of Table 8 for all brightness steps when the load is connected via isolating transformers, and the secondaries of 30 percent of the transformers become open-circuited. The load before opening the isolation transformer secondaries may be any value from half to full load. For regulators less than 10 kW loaded as specified above, the current remains below 6.8 amperes for the 100 percent brightness step.

Table 8: Output Current and Limits

Class	Style	Step	Nominal output amperes (A) root mean square (RMS)	Allowable range (A RMS)
1	1	B100	6.6	6.5 - 6.7
		B30	5.5	5.4 - 5.6
		B10	4.8	4.7 - 4.9
1	2	B5	6.6	6.5 - 6.7
		B4	5.2	5.1 - 5.3
		B3	4.1	4.0 - 4.2
		B2	3.4	3.3 - 3.5
		B1	2.8	2.7 - 2.9
2	2	B5	20.0	19.7 - 20.3
		B4	12.8	15.5 - 16.1
		B3	12.4	12.1 - 12.7
		B2	10.3	10.0 - 10.6
		B1	8.5	8.2 - 8.8

2.18.3 Resistive Loading

The regulator maintains the output current within the limits of Table 8 while powering any load between no load (or short circuit) and full load. For regulators 10 kW or larger, the regulation is maintained over the full range of environmental conditions specified in this section and for the input voltages specified in Table 4. For regulators less than 10 kW, the regulation is provided at nominal input voltage for all brightness steps.

© 2010 ADB Airfield Solutions All Rights Reserved

2.18.4 Regulation

Refer to Table 8 for output current limits. Current regulation is obtained under the conditions listed *in Environmental Operating Conditions*.

2.18.5 Environmental Operating Conditions

The L-828 CCRs are designed for indoor use only in an area with adequate ventilation for cooling the constant current regulator. The environmental operating conditions include temperature range, relative humidity, and altitude.

Table 9: Environmental Operating Conditions

Temperature Range		Relative Humidity	Altitude
Without monitoring circuitry	**With monitoring circuitry**		
-40 to +55 °C (-40 to +131 °F)	0 to +55 °C (-18 to +131 °F)	10 to 95% (non-condensing)	Sea level to 6,600 ft (2000 m)

2.18.6 Protection Devices

L-828 CCRs have the following protection devices:

- Output open-circuit protection.
- Output overcurrent protection.
- Lightning arrestors on output terminals and bushings.
- Lightning arrestors on input terminals.
- Fuse protection of AC supply voltage of the URC PCB and brightness control voltage for Remote control.

2.18.6.1 Open-Circuit Protection

The regulator includes an open-circuit protective device to open the primary switch within 2 seconds after an open circuit occurs in the secondary. The device resets within 2 seconds after the control switch is turned off and re-energized, and cannot be tripped by switching the load circuits or other transients.

2.18.6.2 Overcurrent Protection

Regulators include an overcurrent protective device that opens the primary switch when the output current exceeds the 100 percent current (6.6 A or 20 A) by 5 percent. The device operates within 5 seconds after an overcurrent of 5 percent and within 1 second after an overcurrent of 25 percent. The device resets within 2 seconds after the control switch is turned off and re-energized. The overcurrent protection cannot be activated by a momentary (0.25 second) overcurrent caused by switching the load circuits and other transients.

2.18.7 Input Voltage

Input voltage is single phase 60 Hz ac. Regulators operate as required (see subsections *Resistive Loading* and *Reactive Loading* in this section) when the input voltage is anywhere between 95 and 110 percent of the nominal value. The regulator is designed to withstand momentary voltages up to 120 percent of nominal input voltage without shutting off or being damaged by such overvoltage so long as the duration of overvoltage excursions are not longer than 50 milliseconds and do not occur more than once per minute.

2.18.7.1 Built-In True-rms-Reading Ammeter, L-828 only

For the L-828 only, a flush-mounted true-rms-reading ammeter mounted on the front of the input module PCB indicates the output current. The meter accuracy is ±3.0 percent of the maximum output current.

2.18.7.2 Rating and Input Voltage

Table 10: Rating and Input Voltage

Rating	Input Voltage
4, 7.5, 10, 15, 20, 30 kW	208-480 Vac, -5 to +10%
50, 70 kW	480 Vac, -5 to +10%

2.18.8 Temperature Rise

The temperature rise of the transforming portion of the regulator is in accordance with ANSI C57.12.91 for air-cooled regulators.

© 2010 ADB Airfield Solutions All Rights Reserved

2.19 Dimensions

Table 11: Dimensions and weights

CCR	Dimensions (H x W x D)[1]		Weight - lb (kg)				
Size	208/220V	240/347/480V	208V	220V	240V	347V	480V
4kW	33 x 24 x 25 - in 83.8 x 61 x 63.5 - cm	33 x 24 x 25 - in 83.8 x 61 x 63.5 - cm	434 (196.9)	427 (193.7)	467 (211.8)		502 (227.7)
7.5kW	36 x 29 x 30 - in 91.4 x 73.7 x 76.2 - cm	36 x 29 x 30 - in 91.4 x 73.7 x 76.2 - cm	556 (252.2)	480 (217.7)	514 (233.1)		600 (272.2)
10kW	36 x 29 x 30 - in 91.4 x 73.7 x 76.2 - cm	36 x 29 x 30 - in 91.4 x 73.7 x 76.2 - cm	783 (355.2	749 (339.7)	770 (349.3)		826 (374.7)
15kW	36 x 29 x 30 - in 91.4 x 73.7 x 76.2 - cm	36 x 29 x 30 - in 91.4 x 73.7 x 76.2 - cm	960 (435.4)	872 (395.5)	826 (374.7)		906 (411)
20kW	40 x 33 x 34 - in 101.6 x 83.8 x 86.4 - cm	40 x 33 x 34 - in 101.6 x 83.8 x 86.4 - cm	1290 (585.4)	1150 (521.6)	1187 (538.4)		1097 (497.6)
30kW	40 x 33 x 34 - in 101.6 x 83.8 x 86.4 - cm	40 x 33 x 34 - in 101.6 x 83.8 x 86.4 - cm	1410 (639.6)	1350 (612.3)	1381 (626.4)		1302 (590.60)
50kw[2]	NA	70 x 33 x 34 - in 177.8 x 83.8 x 86.4 - cm	NA	NA	NA	NA	2150 (975.2)
70kW[2]	NA		NA	NA	NA	NA	2400 (1088.6)

1. Based on Input Voltage
2. 50kW and 70kW CCRs are only available on 480V input

Figure 8: Ferroresonant CCR Dimensions – Typical of 4-30 kW

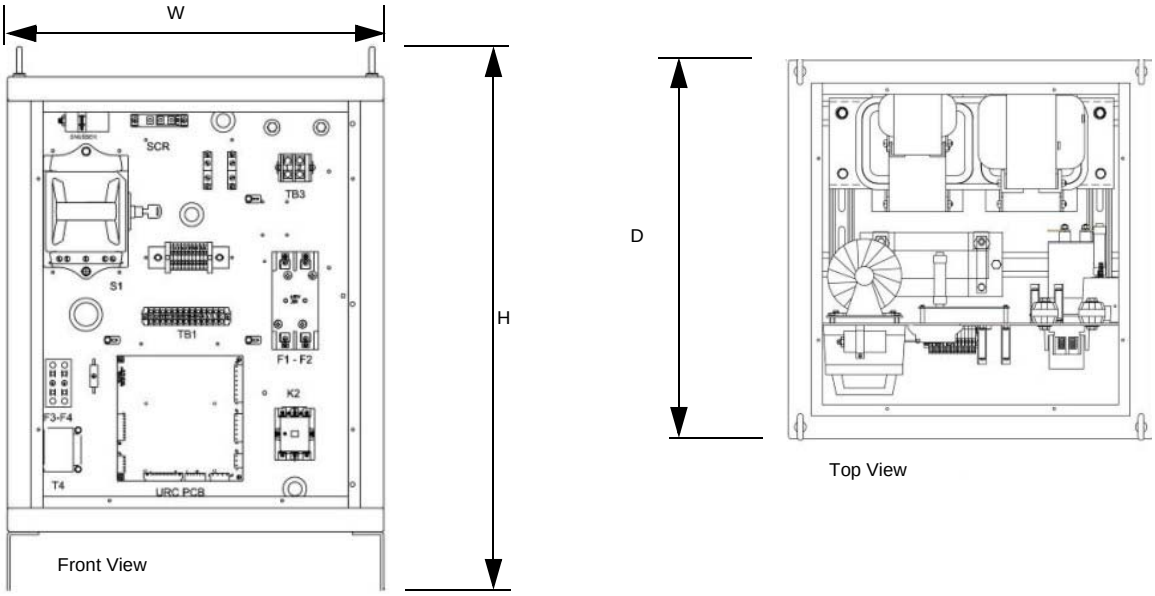

 © 2010 ADB Airfield Solutions All Rights Reserved

Figure 9: Ferroresonant CCR Dimensions – Typical of 50-70 kW

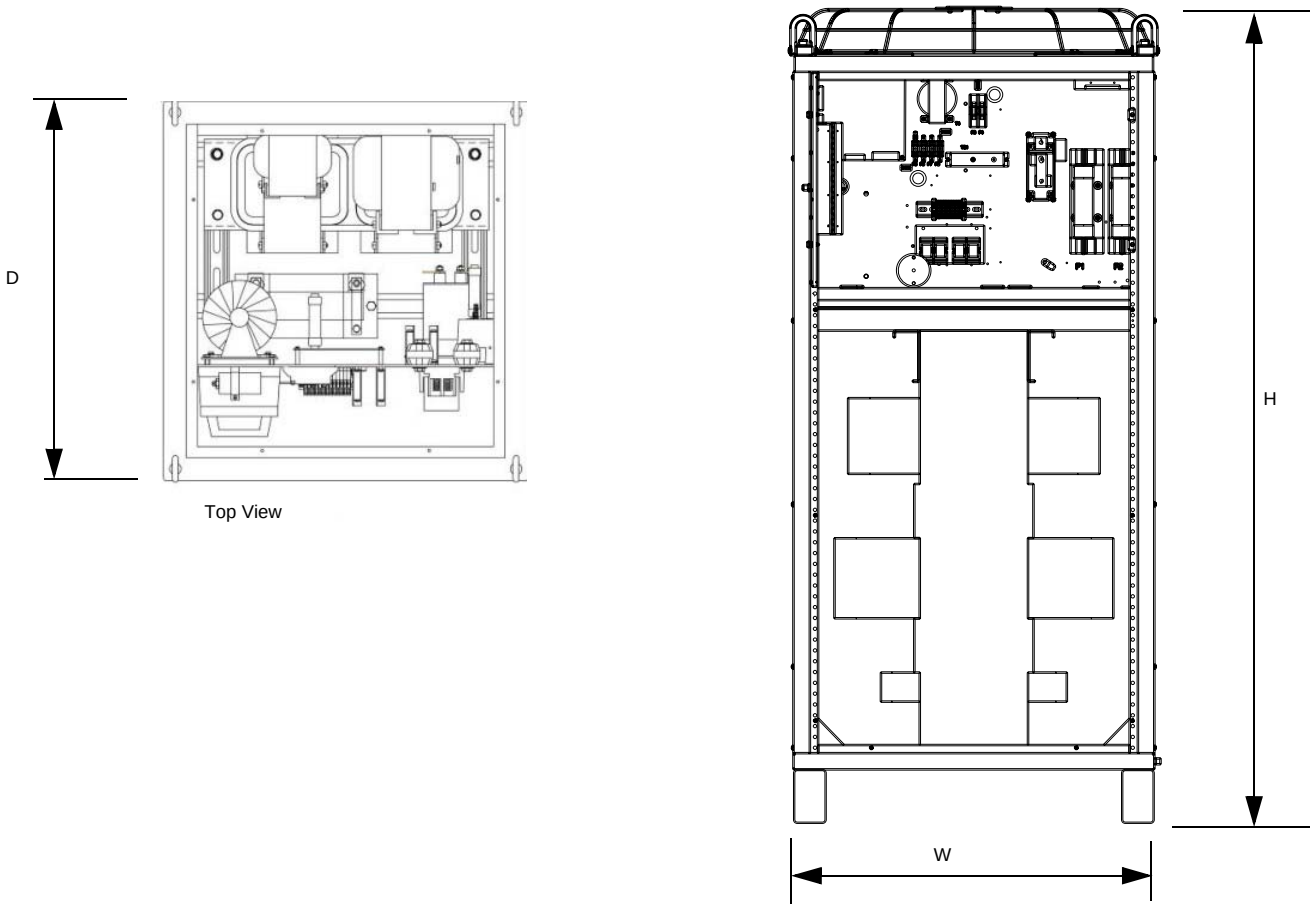

© 2010 ADB Airfield Solutions All Rights Reserved

© 2010 ADB Airfield Solutions All Rights Reserved

3.0 Installation

L-828 / L-829 CCR Installation

WARNING

Read installation instructions in their entirety before starting installation.

- Refer to the FAA Advisory Circular AC 150/5340-26, Maintenance of Airport Visual Aids Facilities, for instructions on safety precautions.
- Observe all safety regulations. To avoid injuries, always disconnect power before making any wiring connections or touching any parts.
- Become familiar with the general safety instructions in this section of the manual before installing, operating, maintaining or repairing this equipment.
- Read and carefully follow the instructions throughout this manual for performing specific tasks and working with specific equipment.
- Make this manual available to personnel installing, operating, maintaining or repairing this equipment.
- Follow all applicable safety procedures required by your company, industry standards and government or other regulatory agencies.
- URC PCB is static-sensitive. Must be grounded when handling PCB.
- Route electrical wiring along a protected path. Make sure they will not be damaged by moving equipment.
- Protect components from damage, wear, and harsh environment conditions.
- Allow ample room for maintenance, panel accessibility, and cover removal.
- Protect equipment with safety devices as specified by applicable safety regulations.
- If safety devices must be removed for installation, install them immediately after the work is completed and check them for proper functioning prior to returning power to the circuit.

This section provides instructions for installing L-828/L-829 constant current regulators (CCRs) (4-70kW/6.6 A/20 A). Refer to the airport project plans and specifications for the specific installation instructions.

3.1 Unpacking

The equipment is shipped ready for installation. Handle equipment very carefully to prevent component damage. Unpack the carton upon receipt and check the contents and their condition. Note any exterior damage to the carton that might lead to detection of equipment damage.

If you note any damage to any equipment, file a claim with the carrier immediately.
The carrier may need to inspect the equipment.

NOTE: Take care to maintain the unit in an upright position when handling the regulator.

3.2 Installation

Recommend lifting for the 4 thru 70kW regulators is to use a forklift from underneath the CCR frame. Lifting points, four 3/4-inch ID eyebolts on the top corners of the CCR frame, are provided per FAA specifications. If lifting eye bolts are used, use either a portable hoist and sling(s) or sling(s) attached from forks on forklift. See Table 11 (dimensions and weights) before lifting.

WARNING

Read installation instructions in their entirety before starting installation.

- If lift points (eyebolts) are used, lift straight up. Side loading on the eyebolts may cause them to bend.

Place the regulator inside a well ventilated room with sufficient clearance for personnel to inspect and maintain the unit.

3.2.1 Wiring Connections and Startup

WARNING

Read installation instructions in their entirety before starting installation.

- Installation and operation of the CCR should be performed by personnel qualified to work on high voltage equipment. The high voltage involved with the unit makes it potentially dangerous and may be lethal if contacted by operating personnel.
- Place wiring for output, input, and remote control only on the right side of the CCR to prevent damage to the PCB that is located on the front Left side of the enclosure. If output, input, and remote control wiring must enter from the left side of the enclosure then wiring must be then routed through conduit where it passes the PCB area.
  See Figure 10.

© 2010 ADB Airfield Solutions All Rights Reserved

To install wiring, perform the following procedure:

1. Verify the input supply voltage corresponds to the voltage rating on the nameplate of the regulator.
2. Make sure the front panel rotary selector switch is set to the OFF position.
3. Ground the regulator by making an adequate ground wire (AWG 6 or larger) connection to the external earth ground lug on the regulator.
4. An appropriate disconnect-type cutout or circuit breaker shall be provided outside the regulator for the input power supply lines.
5. Short-circuit the output terminals TB2-1, TB2-2 using 8 AWG minimum wire to avoid lamp destruction in case of excessive current output.
6. Refer to Table 3 for the recommended input wire. Connect the power supply lines from the disconnect switch or main circuit breaker to the CCR input fuse block F1/F2 or terminal block TB3. Tighten all connections.

Figure 10: Wiring on Right Side of CCR

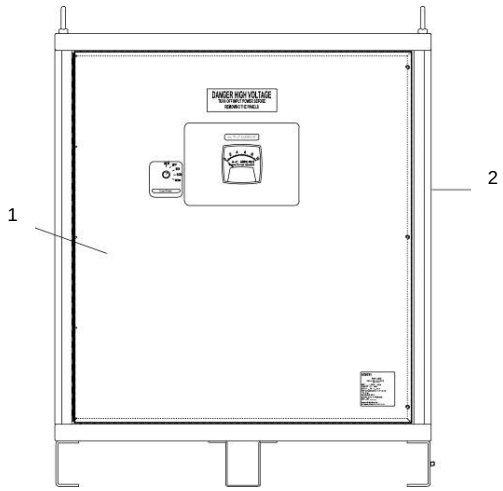

1. Front of CCR
2. Place Conduit and Wire on Right Side of CCR

7. Engage main circuit breaker or disconnect switch to energize the regulator.
8. Turn front panel rotary selector switch to all brightness steps, and verify that current values on the panel ammeter correspond to those in Table 8 for each brightness step.
9. Disengage the main current breaker or disconnect switch to de-energize the regulator.
10. Turn the rotary selector switch to OFF.
11. Connect remote control lines, if required, to remote control terminal block TB1. Use AWG 18, 300 V wire or larger for 120 Vac signals. See “Wiring Schematics” on page 65 for remote control connections.

NOTE: If the ADB Airfield Solutions Advanced Control Equipment (ACE) is used with the Ferroresonant L-828 CCR, refer to the Advanced Control Equipment manual (96A0245) or Advanced Control Equipment 2 (ACE2) manual (96A0357) for wiring connections to remote control.

Table 12 through Table 14 provide the necessary connections for remote control. Terminal B1 (B10) does not need to be wired. Brightness step B1 (B10) occurs when the regulator is switched on.

Table 12: Remote 120 Vac Control Connections (3-Step/6.6 A)

For this remote intensity step…	Connect CCI to…
LOW (4.8 A)	CC

 © 2010 ADB Airfield Solutions All Rights Reserved

MEDIUM (5.5 A)	CC, B30
HIGH (6.6 A)	CC, B100
OFF	Not applicable

Table 13: Remote 120 Vac Control Connections (5-Step/6.6 A)

For this remote intensity step…	Connect CCI to…
2.8 A	CC
3.4 A	CC, B2
4.1 A	CC, B3
5.2 A	CC, B4
6.6 A	CC, B5
OFF	Not applicable

Table 14: Remote 120 Vac Control Connections (5-Step/20 A)

For this remote intensity step…	Connect CCI to…
8.5 A	CC
10.3 A	CC, B2
12.4 A	CC, B3
15.8 A	CC, B4
20 A	CC, B5
OFF	Nothing

12. Make sure wiring connections are tight and no wires are shorting across each other.

CAUTION

Read installation instructions in their entirety before starting installation.

- Incorrect wiring can damage regulator. Double check all connections.

13. Energize regulator and set rotary selector switch to REM. Operate the CCR by remote control, and verify correct current levels are obtained on all brightness steps.
14. Turn rotary selector switch to OFF and de-energize regulator (disengage disconnect switch or main circuit breaker). Remove short-circuit link between output terminals TB-2-1 and TB2-2.
15. Connect the 6.6 A or 20 A series lighting circuit to the output terminals/ bushings and tighten all connections.

Table 15: Input/Output Connections

CCR Size	Input Location	Output Location
4 thru 30kW with SCO	Top of each Fuse Block front of component plate right hand side	Bottom of SCO
CHF 20kW/208 V CHF 30kW/208 V		Lightning Arrestors (VR1 and VR2) on Back of component plate
CHF 4, 7.5, 10 kW	Terminal Block (black) Front of component plate right hand side	Lightning Arrestors (VR1 and VR2) on Back of component plate
N/A		Lightning Arrestors (VR1 and VR2) on Back of component plate
CHF 15,20,30 kW	Terminal Block (white) Front of component plate right hand side Top of each Fuse Block front of component plate right hand side	Lightning Arrestors (VR1 and VR2) on Back of component plate
CHF 50, 70 kW	Top of each Fuse Block – front of component plate top right side	Lightning Arrestors (VR1 and VR2) on Back of component plate

Installation

© 2010 ADB Airfield Solutions All Rights Reserved

3.3 Stacking CCR's (Optional)

CAUTION

Read installation instructions in their entirety before starting installation.

- Before stacking CCRs larger than 10 kW or stacking more than 2 CCRs, contact the ADB Airfield Solutions Sales Department.

To stack CCRs, perform the following procedure:

1. Remove the four ½ x 3–3/4 HILTI anchor bolts with 4 nuts and lock washers for anchoring the CCRs to concrete, and the four 1/2–13 x ¾ hex head bolts and ½ split lock washers from the stacking kit (Part Number 94A0355).
2. See Table 11 for anchor bolt template. Use the four ½ x 3.75 Lg HILTI anchor bolts with 4 nuts and lock washers to anchor the CCR to the concrete floor.

NOTE: Make sure the clearance behind the CCR is far enough from the wall for easy access to the regulator.

Figure 11: Anchor Bolt Template

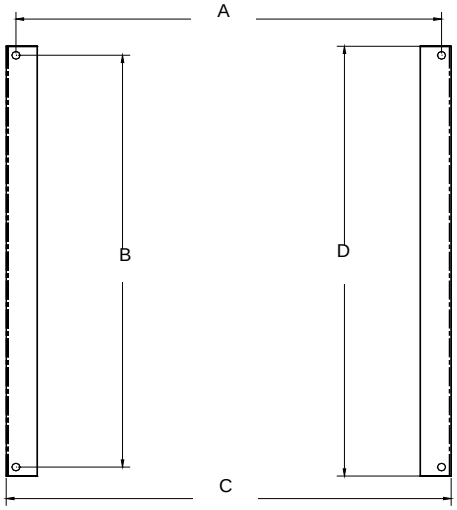

CCR	A	B	C	D
Small	22.50 in	23.50 in	23.75 in	24.75 in
Medium	27.50 in	28.50 in	28.75 in	29.75 in
Large	31.50 in	32.50 in	32.75 in	33.75 in

Installation

© 2010 ADB Airfield Solutions All Rights Reserved

Figure 12: Location of Bolts for Stacking CCRs

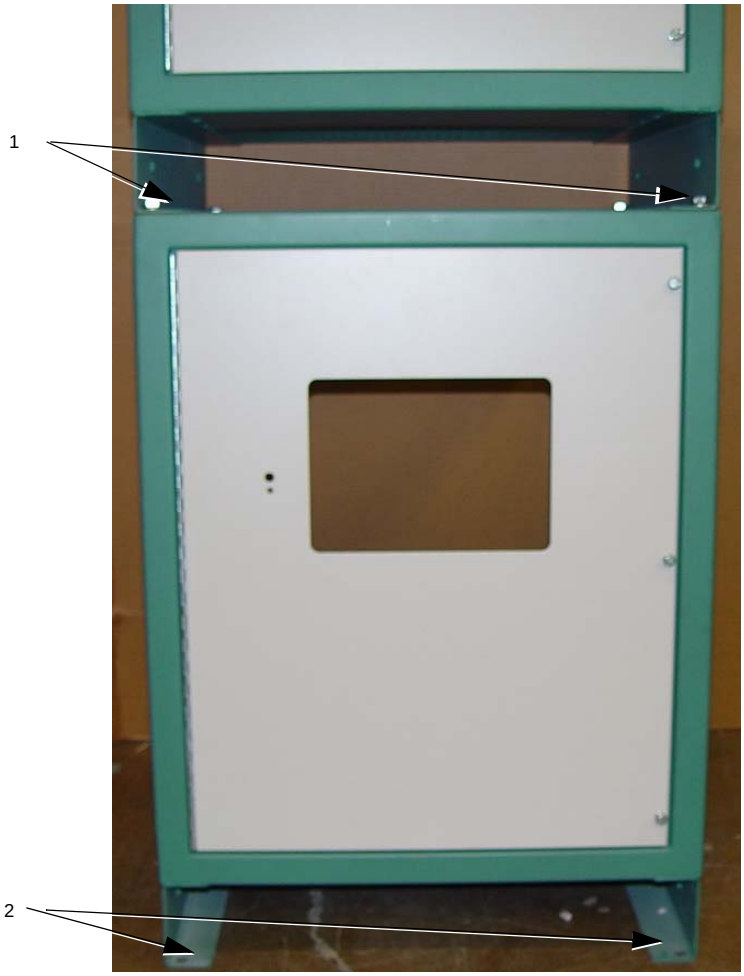

1. Hex Head Bolts and Split Lock washers
2. ½ x 3–3/4 inch HILTI Anchor Bolt Location

1. Remove the 4 eye bolts from the anchored CCR.
2. Stack the second CCR by positioning its 4 holes carefully on top of the holes of the CCR anchored to the concrete floor.
3. Install the 4 hex head bolts and split lock washers (See Figure 12, Item 1 and Figure 14, Item 1).

© 2010 ADB Airfield Solutions All Rights Reserved

Figure 13: Stacking Bolt

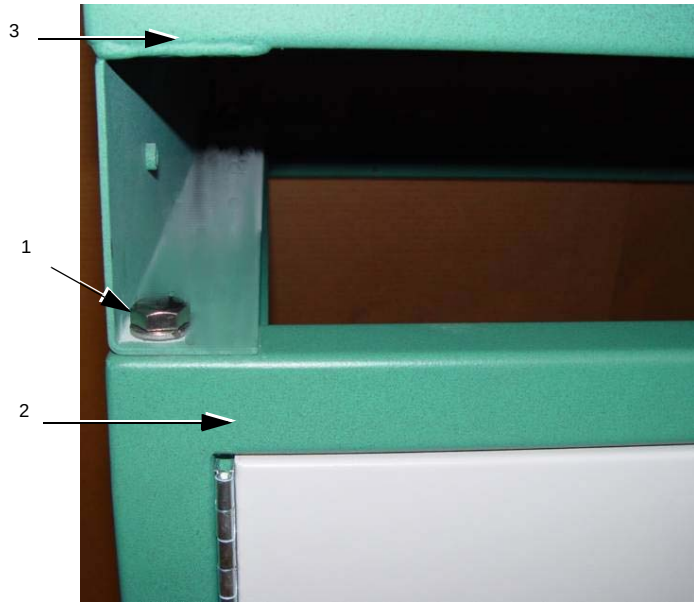

1. Stacking Bolt
2. Bottom CCR Anchored to Concrete
3. Top CCR

© 2010 ADB Airfield Solutions All Rights Reserved

3.4 SGRS Style Powerpacks (Optional)

CAUTION

Read installation instructions in their entirety before starting installation.

- SGRS Style Powerpacks should be installed using Powerpack lift device.

For information on installing SGRS Powerpacks refer to the SGRS Installation Manual. Document number 96A0303.

Figure 14: Powerpack Installation in SGRS

1. Upper Bay Powerpack
2. Lower Bay Powerpack

Installation

© 2010 ADB Airfield Solutions All Rights Reserved

3.5 Frames

Figure 15: Large Frame Assembly

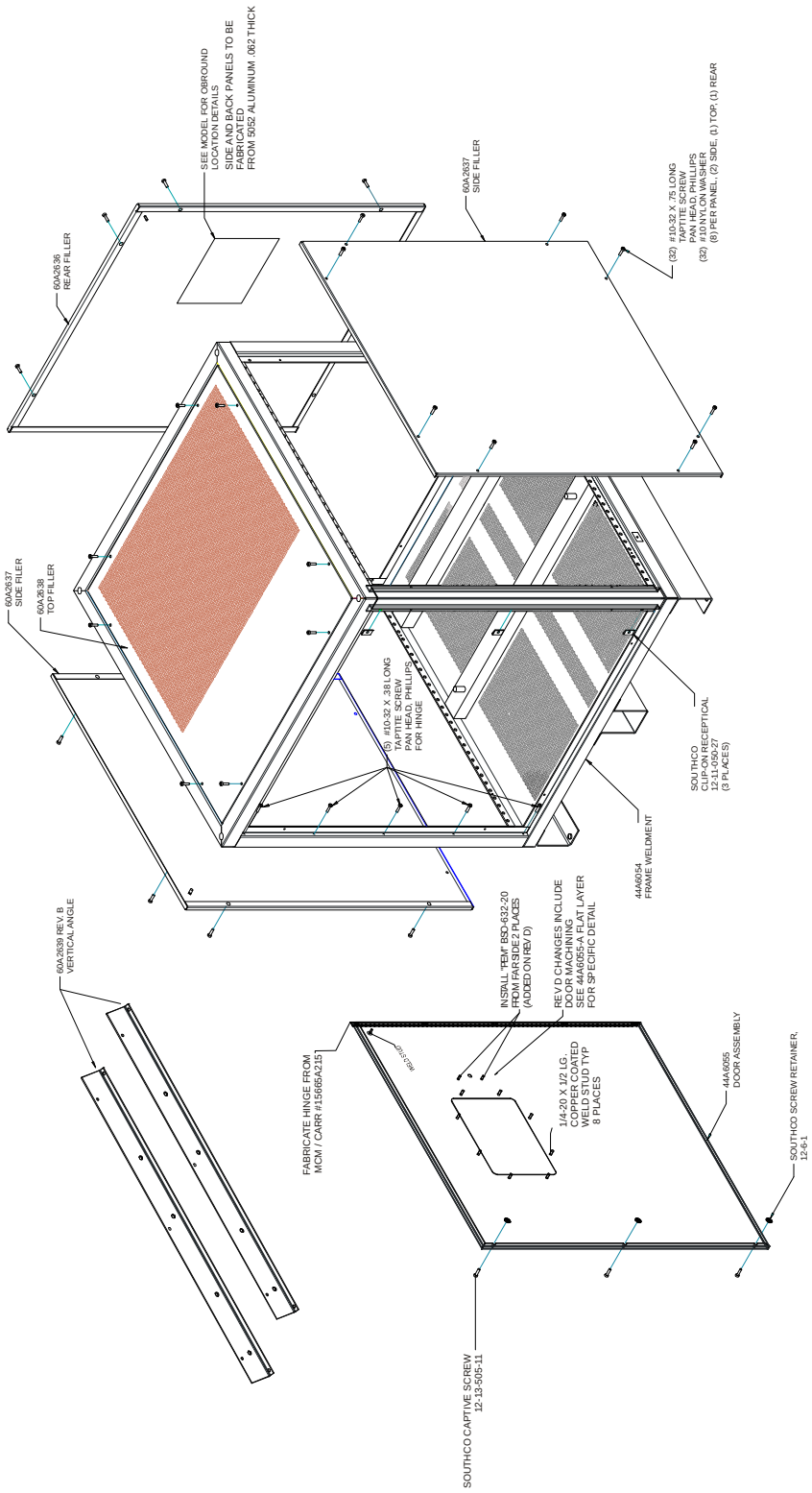

© 2010 ADB Airfield Solutions All Rights Reserved

Installation

4.0 Operation

WARNING

Read the instructions in their entirety before starting installation.

- Contents are static-sensitive. Must be grounded when handling PCB.
- Operation of a Regulator while overloaded at any step may result in equipment failure or equipment damage.

4.1 Introduction

This section provides the operational procedures listed below for the L-828/L-829 constant current regulator (CCR) (4-70 kW/6.6 A or 20 A).

— CCR control procedures
— CCR shutdown procedures
— CCR adjustment procedures
— SCO Cutout working positions

4.2 CCR Control Procedures

This subsection describes the regulator operations in local and remote controls.

4.2.1 Local Control

See Figure 16. Refer to Table 16 through Table 18 for output current when using local control. The front panel rotary selector switch is used for regulator local control. The rotary switch for the 3-step CCR has five positions; the rotary switch for the 5-step has seven positions. The regulator automatically maintains the output current within ±1% of the nominal value for the brightness position selected.

Figure 16: Switch (3-Step/5-Step)

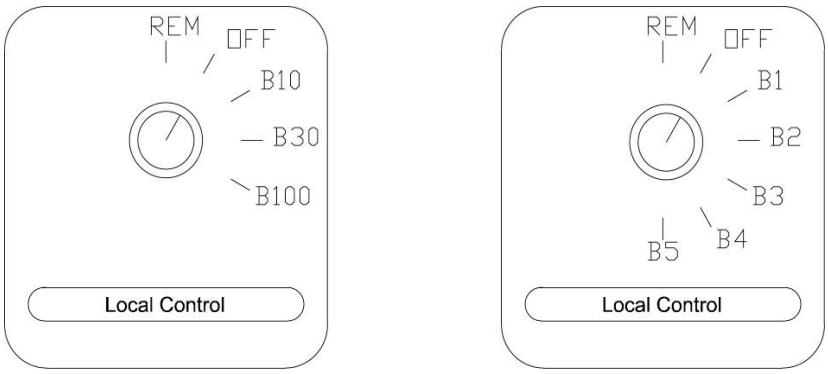

3-Step Switch Assembly

5-Step Switch Assembly

Table 16: Output Current from Rotary Switch (3-Step/6.6A)

If you set the rotary switch to the following...	The result is...
B10	4.8 A current output
B30	5.5 A current output
B100	6.6 A current output

Table 17: Output Current from Rotary Switch (5-Step/6.6 A)

If you set the rotary switch to the following...	The result is...
B1	2.8 A current output
B2	3.4 A current output
B3	4.1 A current output
B4	5.2 A current output
B5	6.6 A current output

Operation

© 2010 ADB Airfield Solutions All Rights Reserved

Table 18: Output Current from Rotary Switch (5-Step/20 A)

If you set the rotary switch to the following...	The result is...
B1	8.5 A current output
B2	10.3 A current output
B3	12.4 A current output
B4	15.8 A current output
B5	20 A current output

4.2.2 Remote Control

See Figure 16. Refer to Table 19 for instructions on how to set up and use remote control.

Table 19: Remote Control

If...	Then...
The rotary switch is set to position REM and remote control wiring is connected to remote control terminal block TB1 on the regulator	Remote control of the regulator is possible. The output current of the regulator will correspond to the brightness setting energized by remote 120 Vac or 48 Vdc control signals.
Switch is set to OFF	Remote control signals will not operate the regulator; that is, turn the regulator on to a particular brightness setting or turn the regulator off.
No remote control connections exist on terminal block TB1 (switch is set to REM)	The position REM becomes an additional OFF position; that is, the regulator is de-energized.

4.3 CCR Door Interlock (Optional)

The optional door interlock disables remote and local control of the CCR when the door is opened. If the door is opened while the CCR is running, the CCR will shut OFF.

This is to protect personnel from coming into contact with high voltage electronics.

NOTE: Power to the output terminals is now off, and the regulator cannot be energized by remote control signals. Power is still present on the input power terminals and on the internal control circuitry.

To bypass the interlock, pull out the plunger of the interlock switch. This will allow remote and local control of the CCR with the door open.

Operation

4.4 CCR Shutdown Procedure

See Figure 16. To shut down the CCR, set the rotary switch to position OFF.

The door interlock removes power to the CCR when the door is opened. Pull out the plunger fully to bypass.

NOTE: Power to the output terminals is now off, and the regulator cannot be energized by remote control signals. Power is still present on the input power terminals and on the internal control circuitry.

To remove input power, disengage disconnect switch or external circuit breaker.

4.5 CCR Adjustment Procedures

This subsection provides regulator adjustment procedures.

NOTE: The regulator has been adjusted at the factory to provide the nominal output current levels as given in Table 16. If the current level settings need to be adjusted, read the following warning statement before proceeding.

WARNING

Read the instructions in their entirety before starting installation.

Only personnel qualified to work on high voltage systems should attempt to make any adjustments on the constant current regulator.

Turn the rotary selector switch on the front panel of the regulator to position OFF. Remove input power before servicing control circuitry.

Never service the regulator when it is in protective shutdown mode, Remote controls or power fluctuations can restart the regulator.

© 2010 ADB Airfield Solutions All Rights Reserved

4.5.1 Output Current Adjustment

To adjust the output current, perform the following procedure:

1. Connect a clamp-on true rms-reading instrument (such as a Fluke 87 multimeter with a current clamp) around one of the output current leads. See Figure 17.

Figure 17: Output Current Clamp

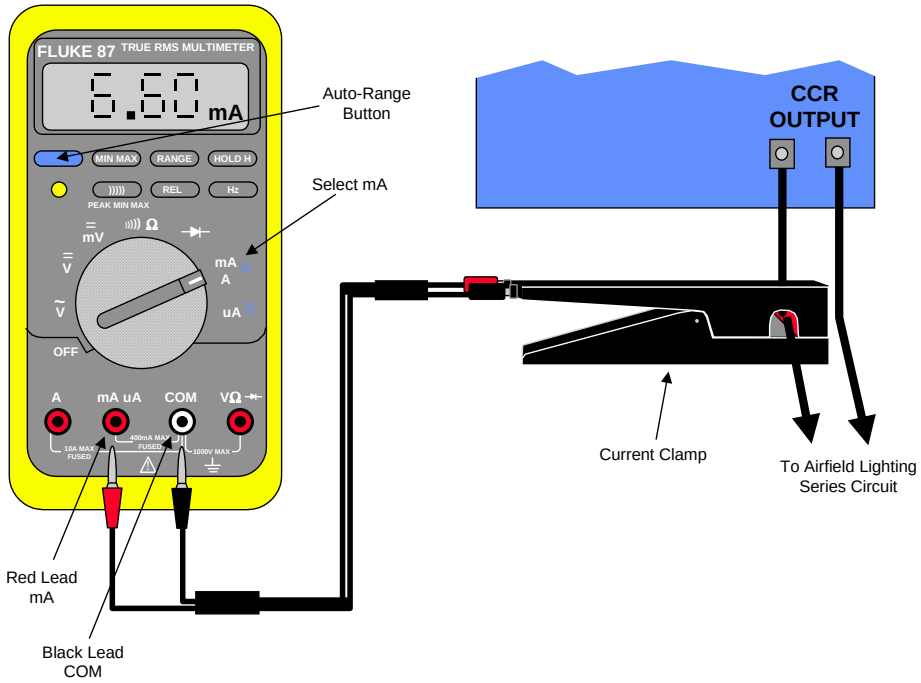

NOTE: Make sure the meter is set on the AC current scale.

Because the output current waveform is not a true sine wave, the ammeter must be of the true-rms (root mean squared) type. Field instruments such as clamp-on ammeters and Simpson voltmeters will give erroneously low readings.

2. Energize the regulator locally, and set the rotary selector switch to the maximum brightness position
   B5 or **B100**.
3. See Figure 18. Carefully adjust R40 on the universal regulator controller board until the desired current is measured on the meter.

WARNING

Read the instructions in their entirety before starting installation.

Dangerous voltages are present on the URC PCB. It is strongly recommended that a nonconductive screwdriver be used during calibration to protect personnel and the PCB from accidental damage.

Operation

© 2010 ADB Airfield Solutions All Rights Reserved

Figure 18: R40 (URC Board)

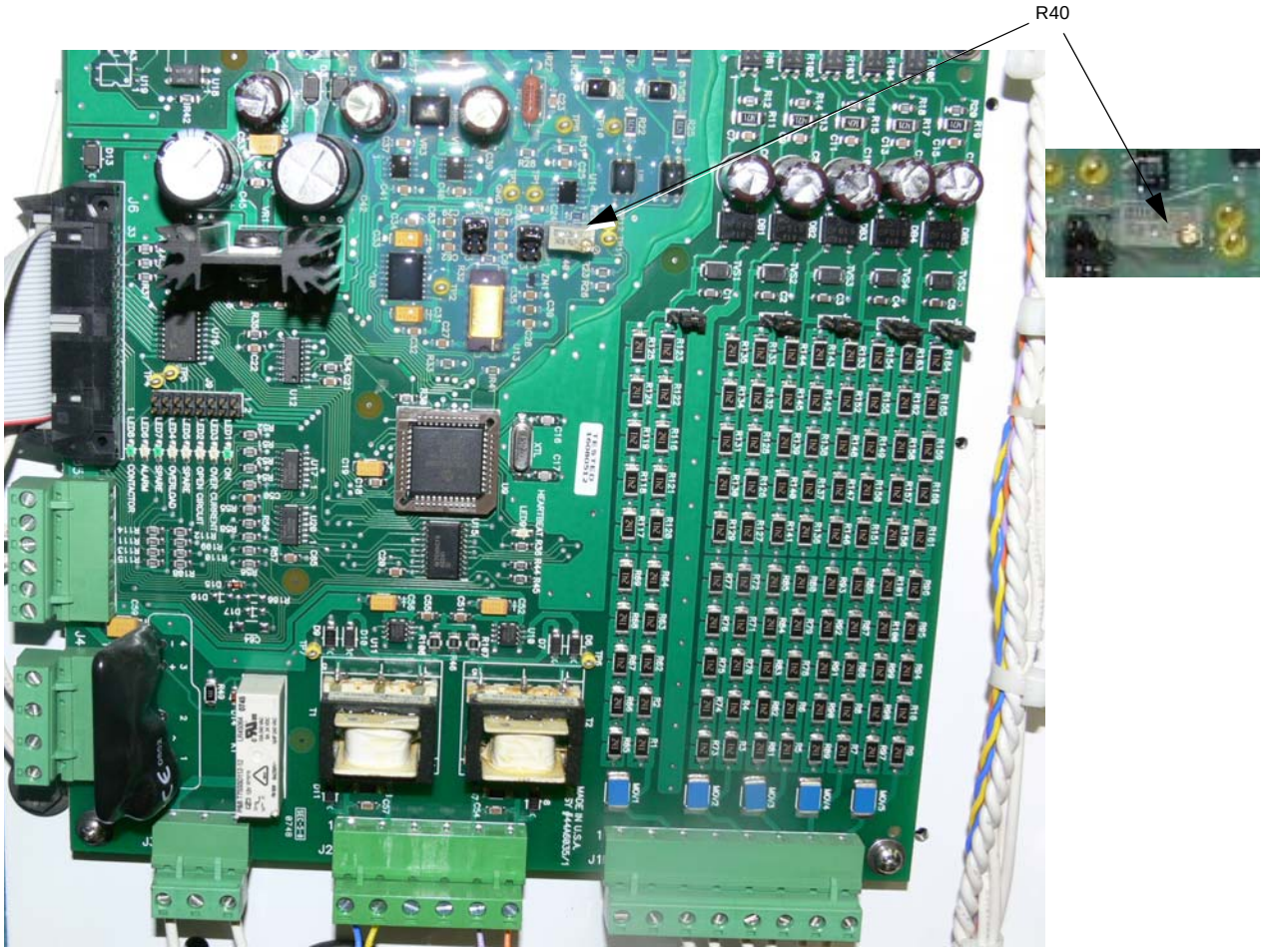

4.5.2 Overcurrent Adjustment

No adjustment is necessary.

© 2010 ADB Airfield Solutions All Rights Reserved

4.6 SCO Cutout Working Positions

See Figure 19. The SCO cutout can be plugged in three orientations. For additional information on the SCO cutout, refer to manual 96A0294, *SCO Cutout*..

Figure 19: Handle Orientations

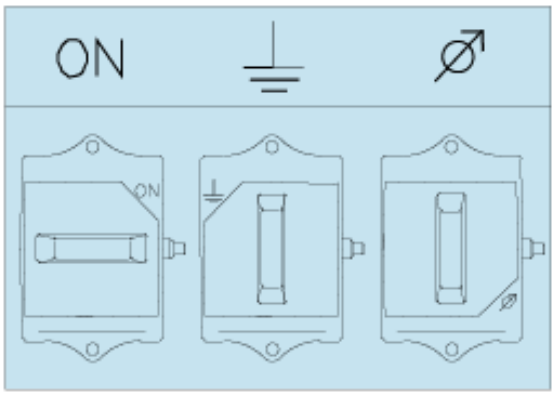

In the operation position, the regulator is connected to the series circuit, and the microswitch is activated.

NOTE: An activated microswitch means that the normally open contact is closed and that the normally closed contact is open. For interlocking with the CCR, only the normally open contact is used. When the cover is removed, the microswitch is not activated. When the microswitch is not activated local and remote control is disabled.

Figure 20: SCO Cutout Operation Position

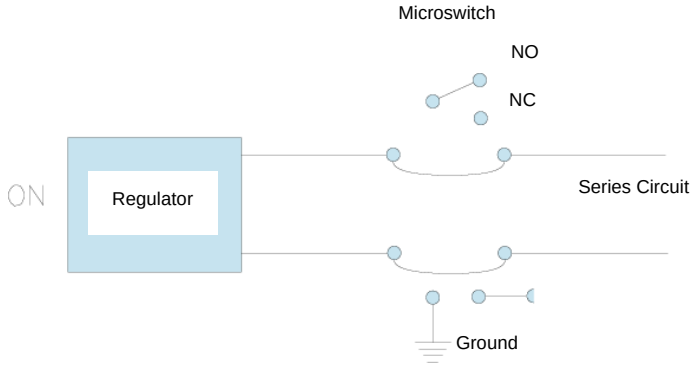

See Figure 21. In the maintenance position, the regulator and the series circuit are both shorted and grounded. The microswitch is not activated.

Operation

© 2010 ADB Airfield Solutions All Rights Reserved

Figure 21: SCO Cutout Maintenance Position

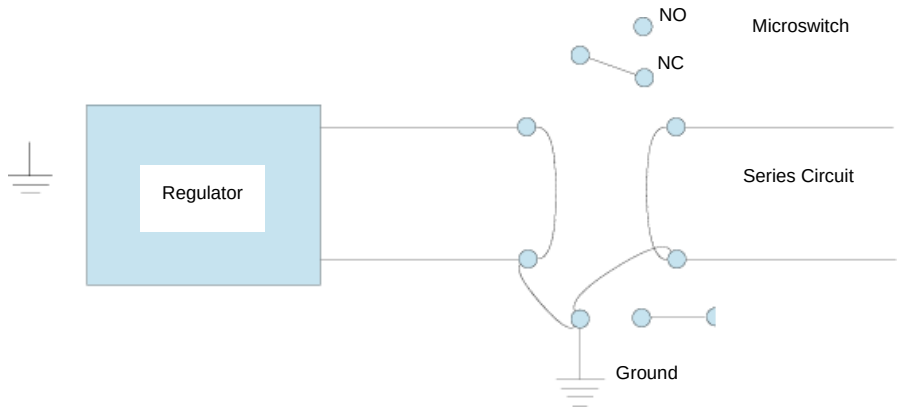

You can determine the current orientation by observing the cutoff corner of the handle.

See Figure 22. In the test and measure position, the insulation resistance of the series circuit can be measured. The regulator operation can be tested under short-circuited output conditions.

In the test and measure position, the regulator is shorted and grounded; the series circuit is shorted and connected to the measurement socket. The microswitch is activated.

Figure 22: SCO Cutout Test and Measure Position

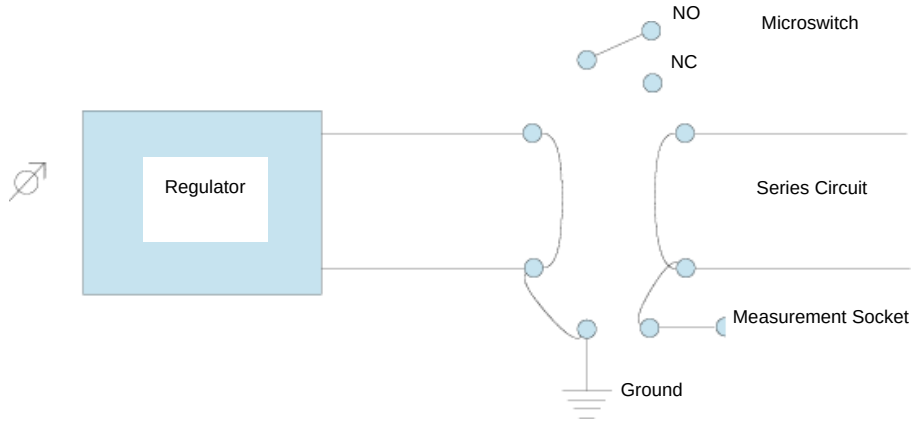

Operation

© 2010 ADB Airfield Solutions All Rights Reserved

4.7 Application Notes

Monitoring Option	Description	Application
0	None	Standard L-828 supplied with analog ammeter
1	ALCMS Scanning Monitor Interface (SMI)	The SMI option adds Primary Power and Remote/Local monitoring relays. Dry relay contacts are connected to a dedicated terminal block for each monitored point. Typical application: connecting ADB L-828 CCR to ALCMS or L-827 that is manufactured by others. Note that this option does not provide dedicated output current or voltage transformers.
2	ALCMS Scanning Monitor Ready (SMR)	The SMR option adds several monitoring relays (including Primary Power and Remote/Local) and also CCR output current and voltage transformers. All monitored signals are connected to a dedicated terminal block. Application only for connecting ADB L-828 CCR to ADB Gen I/II ALCMS scanning monitoring system.
3	L-829 Monitoring (ACE™)	Includes FAA L-829 monitoring equipment. • If application is for connection to ADB L-890 ALCMS: Add a "/A" to end of Ordering Code. The ACE unit will then be programmed to provide monitoring data via dual-redundant communication links. • If application is for a stand-alone L-829 CCR: Ordering Code is not changed. The ACE unit is programmed to activate a dry contact closure if a fault is present. The fault alarm can then be connected to any external monitoring system.
4	Insulation Resistance Monitoring System (IRMS) Ready	This option adds an IRMS board in the CCR. Application: connection to externally mounted ADB ACE unit.
5	L-829 Monitoring (ACE) and IRMS	Includes FAA L-829 and IRMS equipment. • If application is for connection to ADB L-890 ALCMS: Add a "/A" to end of Ordering Code. The ACE unit will then be programmed to provide monitoring data via dual-redundant communication links. • If application is for a stand-alone L-829 CCR with Insulation Resistance Monitoring: Ordering Code is not changed. The ACE unit is programmed to activate a dry contact closure if a fault is present. The fault alarm can then be connected to any external monitoring system.
6	L-828 with Digital Power Meter	This option replaces the analog ammeter with a Digital Power Meter. The Digital Power Meter is used on L-828 CCRs to indicate True RMS output current, voltage, VA, and watts. It can also be set to activate an alarm if there is a 10% or 15% drop in the load (Low VA).

© 2010 ADB Airfield Solutions All Rights Reserved

4.8 Digital Power Meter Calibration (optional)

4.8.1 Display

Figure 23: Meter Display

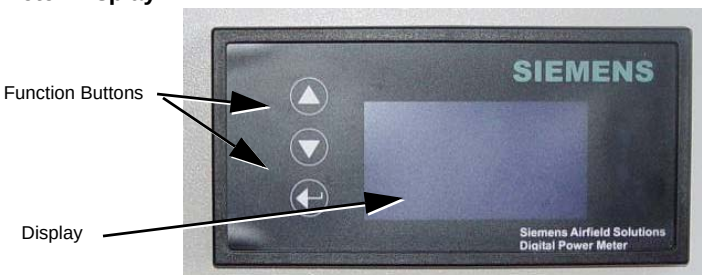

4.8.2 Function Buttons

Figure 24: Function Buttons

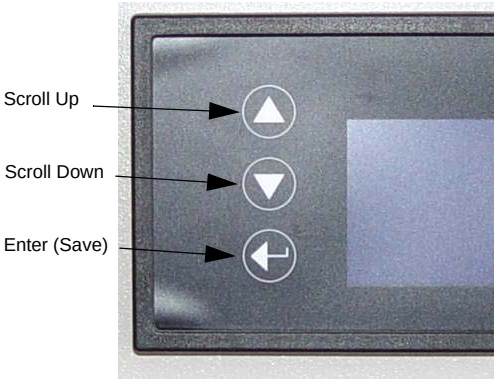

4.8.3 DPM Displays

NOTE: Scroll through displays using the **Scroll Up** and **Scroll Down** buttons. After 30 seconds the display will revert to the default setting of **A rms.**

Operation

© 2010 ADB Airfield Solutions All Rights Reserved

4.8.4 Calibration Procedure

NOTE: The following is needed to calibrate the DPM:

— Calibrated true-rms AC multimeter with current clamp.
— High Voltage probe capable of reading 5,000V true-rms.
— Ability to apply a shorted load to CCR.
— Ability to apply a field load or equivalent resistive load to CCR.

WARNING

Read the instructions in their entirety before starting installation.

The CCR must be operating during calibration. Risk of electrical shock. Failure to observe this warning may result in personal injury, death, or equipment damage.

Proceed as follows to calibrate the DPM

1. Depress and hold the top **SCROLL** button and the bottom **ENTER** button **simultaneously** for 3 seconds (See Figure 24) to enter the calibration menu.

Figure 25: Calibration Menu

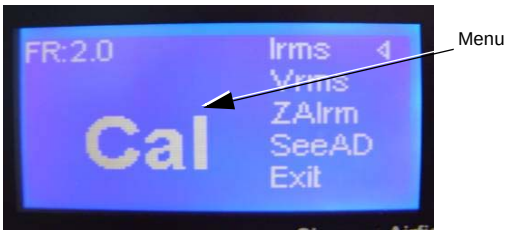

The **SCROLL** buttons are used to select items on the calibration menu. Scroll to the desired selection and then press the **ENTER** button. See the following steps to calibrate the DPM.

Current Calibration

During calibration you will be asked to wait until displayed “cnt” values settle. These “cnt” values are internal A/D values as measured by the power meter’s microprocessor. These values will always vary slightly while the meter is measuring voltage and current. They are displayed to give feedback that the load has settled and the meter is obtaining a steady reading.

NOTE: TIP: At each calibration step, wait until the thousands digit has settled before proceeding.

A. **Irms** – High Step (6.6 amps)

Using the **SCROLL** buttons, select Irms and follow the prompts to calibrate the Irms.

- Short the CCR output and then turn the CCR to the highest step.
- Measure the CCR output current with a true-rms current meter and adjust the current value on the meter display to match.

NOTE: If the CCR output needs to be adjusted follow the procedure in “CCR Adjustment Procedures” on page 30.

- Wait until the Icnt and **V Cnt** values settle and select the **ENTER** button.

Operation

© 2010 ADB Airfield Solutions All Rights Reserved

Figure 26: Irms High Step Calibration

B. Irms Low Step (2.8 amps)

Repeat the previous steps and follow the prompts for the Low CCR step.

C. Press **ENTER** button to save.

Figure 27: Irms Low Step Calibration

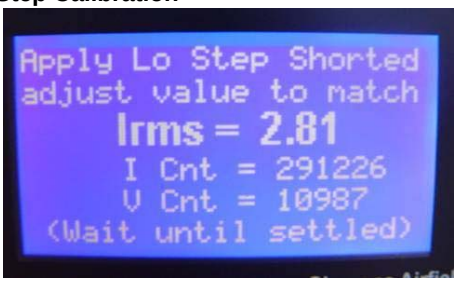

Voltage Calibration

At the calibration screen, scroll to Vrms on the menu and press the **ENTER** button. The next screen (Figure 28) shows the last calibration voltage set points and internal A/D numbers. **Select Y** (yes) to enter the Vrms calibration.

Figure 28: Vrms Calibration

A. Vrms – High Step Loaded

WARNING

Read the instructions in their entirety before starting installation.

Use proper safety procedures when adjusting the meter display.

Following screen prompts, apply the field load or equivalent resistive load to the CCR at the high step. Measure the Vrms at the CCR output terminals with the High Voltage probe. Adjust the meter display to match the measured voltage. Wait for the cnt-number to settle (this may take a couple minutes while the load heats up) and then press the **ENTER** button.

Operation

© 2010 ADB Airfield Solutions All Rights Reserved

Figure 29: Vrms High Step Loaded

B. Vrms - Off

Follow the prompts to turn off the CCR. When the **Cnt** has settled press the **ENTER** button. (**Cnt** may not go to zero)

Figure 30: Save Vrms Calibration

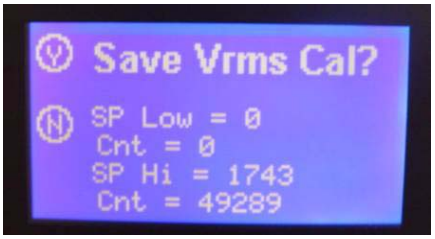

Operation

© 2010 ADB Airfield Solutions All Rights Reserved

© 2010 ADB Airfield Solutions All Rights Reserved

5.0 Maintenance and Repair

This section provides maintenance and repair instructions for the L-828 and L-829 CHF Air-cooled CCRs.

WARNING

Read the instructions in their entirety before starting installation.

- Only personnel authorized to work on high-voltage equipment should perform maintenance on the regulator.
- Operate regulator under local control (using rotary switch) when performing maintenance tasks on the regulator. This will prevent the regulator from accidentally being turned on and causing serious injury or death. De-energize regulator by turning rotary switch to OFF, and remove input power to regulator by turning off disconnect switch or main circuit breaker before opening access door to service regulator.
- If the regulator experiences an overvoltage or an over-current fault, it will enter protective shutdown mode. In this mode, the regulator turns off until either power to the regulator is cycled, or the regulator is turned off with either the rotary switch or the remote controls.

This section provides preventive maintenance for L-828 /L-829 constant current regulators (CCRs) (4-70 kW 6.6 A or 20 A).

5.1 Maintenance Schedule

To keep the L-828/L-829 CCRs operating efficiently, follow a preventive maintenance schedule.Refer to Table 20.

Table 20: L-828/L-829 CCR (4-70 kW/6.6 A/20 A) Maintenance

Interval	Maintenance Task	Action
Daily	Check all control equipment for proper operation.	Check local and remote control (if used) on each brightness step.
Monthly	Check input voltage.	If input voltage is not within -5% to +10% of the nominal value specified on the nameplate of the regulator, notify power company to correct voltage.
	Check and record output current on each brightness step.	Use a true-rms reading instrument. Adjust current levels if out of tolerance. Refer to *Adjustment Procedures* in the *Operation* section. Refer to “Output Current and Limits” on page 12 for the current range for the 3-Step and 5-Step CCRs.
Annually	Check relays, wiring and insulation.	Replace contacts that are excessively burned or pitted.
		Operate the local control switch to check for proper operation of relays and contactors.
		Make sure input and output connections are tight and that no damaged wires or damaged insulation exists.
	Inspect housing for rust spots.	Clean and touch-up rust spots with paint.
	Inspect lightning arrestor connections.	Tighten any loose connections. Replace charred or burnt wiring or broken arrestors.
	Perform a short-circuit test.	Refer to *Short-Circuit Test* in this section.
	Perform an open-circuit test.	Refer to *Open-Circuit Test* in this section.
Unscheduled	Check load on regulator.	At installation and subsequent load changes make sure that the output rms-voltage times the output true-rms current does not exceed the rated load on the nameplate of the regulator.

© 2010 ADB Airfield Solutions All Rights Reserved

5.1.1 Short-Circuit Test

WARNING

Read the instructions in their entirety before starting installation.

Only personnel authorized to work on high-voltage equipment should perform maintenance on the regulator.

Since high open-circuit voltages may result by opening the primary of a series lighting circuit, only personnel authorized to work on high-voltage equipment should be allowed to perform the short-circuit test.

To perform the short-circuit test, perform the following procedure:

1. Remove input power to the regulator (turn off disconnect switch or main circuit breaker) and turn the rotary switch to OFF.
2. Remove leads from output terminals and bushings. Use AWG 8 or larger wire to short output bushings.
3. Energize the regulator and turn the rotary selector switch to the lowest brightness step (1) and then to the remaining brightness steps. Check the output current on the ammeter at each step.

NOTE: The output current should be within the tolerance given in “Output Current and Limits” on page 12. The panel meter is intended to indicate function. Any calibrations should be performed with a calibrated true-rms current meter.

4. If the output current is not within the limits specified in “Output Current and Limits” on page 12 check the input voltage to the regulator. The supply voltage should be within –5% to +10% of the nominal input voltage given on the regulator nameplate. Refer to *Adjustment Procedures* in the *Operation* section.
5. Turn off disconnect switch or main circuit breaker to remove input power to regulator.
6. Disconnect the shorting jumper and reconnect output cables.
7. Close input-power disconnect switch or main circuit breaker.

5.1.2 Open-Circuit Test

WARNING

Read the instructions in their entirety before starting installation.

Only personnel authorized to work on high-voltage equipment should perform maintenance on the regulator.

Since high open-circuit voltages may result by opening the primary of a series lighting circuit, only personnel authorized to work on high-voltage equipment should be allowed to perform the open-circuit test.

To perform the open-circuit test, perform the following procedure:

1. Remove input power to regulator (turn off disconnect switch or main circuit breaker) and turn the rotary switch to OFF.
2. Disconnect cables from the output terminals and bushings.
3. Turn on input power to the regulator.
4. Turn the rotary switch to the lowest brightness position (1). The open-circuit protective device should automatically de-energize the regulator in less than 2 seconds.
5. Turn the rotary switch to OFF. The open-circuit protective device should reset.
6. Turn the rotary switch to position 1. The regulator should turn on and then de-energize in less than 2 seconds.
7. If regulator operation is satisfactory, turn rotary switch to OFF, and turn off disconnect switch or main circuit breaker before reconnecting the load.
8. After the load has been reconnected, turn on input power to the regulator.

© 2010 ADB Airfield Solutions All Rights Reserved

5.2 Troubleshooting

WARNING

Read the instructions in their entirety before starting installation.

Only personnel authorized to work on high-voltage equipment should perform maintenance on the regulator.

Allow only qualified personnel to perform the following tasks. Observe and follow the safety instructions in this document and all other related documentation.

Since high open-circuit voltages may result by opening the primary of a series lighting circuit, only personnel authorized to work on high-voltage equipment should be allowed to perform the open-circuit test.

De-energize regulator by turning rotary switch S1 to OFF, and remove input power to regulator by turning off disconnect switch or main circuit breaker. Discharge capacitors and ground output terminals bushings by using a grounding rod prior to touching any parts.

If the regulator de-energizes, the output circuit could be interrupted by an overcurrent, open-circuit, or undervoltage condition. Before inspecting the output circuit. Place rotary selector switch S1 in the OFF position and turn off disconnect switch or main circuit breaker. Without this precaution, a dip in the power line may reset the regulator and turn it on, resulting in an output voltage of thousands of volts which can cause serious injury or death.

Contents are static-sensitive. Must be grounded when handling PCB.

Short the output terminals before switching the regulator on. The wire should be AWG 8 or larger.

5.2.1 Preliminary Troubleshooting

The following is a check list of initial steps to perform.

- Visually examine all areas of the CCR. Do burnt or loose connections/parts exist?
- Is the input voltage present and within +10 to –5% of nominal?
- Check all the fuses.
- Are the wire harness connectors to the control board fully seated?
- Have the PCBs been adjusted in accordance with the instruction manual?
- If the CCR works in local but not Remote, check the voltage on the Remote control lines.
- Can the CCR be re-energized by turning the rotary switch from OFF to Step B1 (B10)?
- Short the output of the CCR with an AWG 8 wire, and turn on the CCR. If the regulator operates normally, the problem is probably load related.
- If the CCR turns on and then shuts off after a few seconds and the ammeter has a high current reading, the problem is overcurrent. Adjust the output current accordingly. If the output current is not adjustable, replace the control board restart the regulator.
- If the CCR still fails in overcurrent, replace the SCR and restart.

© 2010 ADB Airfield Solutions All Rights Reserved

5.2.2 Troubleshooting Fuses

This subsection provides information for troubleshooting fuses.

Table 21: L-828/L-829 Input Power Fuses F1 and F2.
Amp rating as a function of input voltage and CCR kW rating for input power fuses F1 and F2 on the L-828 and L-829 CCRs. Input Power Fuses, F1 and F2, per CCR Input Voltage and CCR kW Rating

CHF/XXXX INPUT FUSES (F1, F2)

SIZE	208 V	220 V	240 V	347 V	480 V
4kW	47A0092	47A0069	47A0069	47A0191	47A0090
7.5kW	47A0093	47A0093	47A0070	47A0193	47A0091
10kW	47A0094	47A0071	47A0071	47A0088	47A0085
15kW	47A0099	47A0096	47A0096	47A0217	47A0088
20kW	47A0072	47A0072	47A0099	47A0097	47A0087
30kW	47A0102	47A0101	47A0101	47A0106	47A0097
50kW	N/A	N/A	N/A	N/A	47A0106
70kW	N/A	N/A	N/A	N/A	47A0141

47A0069	Fuse 25A 250V Time Delay
47A0070	Fuse 45A 250V
47A0071	Fuse 60A 250V
47A0072	Fuse 125A 250V
47A0085	Fuse 30A 600V
47A0087	Fuse 60A 600V
47A0088	Fuse 50A 600V
47A0090	Fuse 12A 600V
47A0091	Fuse 25A 600V
47A0092	Fuse 30A 250V
47A0093	Fuse 50A 250V
47A0094	Fuse 70A 250V
47A0096	Fuse 80A 250V
47A0097	Fuse 90A 600V
47A0099	Fuse 110A 250V
47A0101	Fuse 175A 250V
47A0102	Fuse 200A 250V
47A0106	Fuse 125A 600V
47A0120	Fuse 2400V
47A0141	Fuse 200A 600V

Table 22: Input Fuse Blocks

CHF/XXXX INPUT FUSE BLOCK (Item 11)

SIZE	208 V	220 V	240 V	347 V	480 V
4kW	72A0091	72A0091	72A0091	49A0081	49A0081
7.5kW	72A0098	72A0098	72A0098	49A0081	49A0081
10kW	72A0091	72A0098	72A0098	49A0082	49A0081
15kW	72A0091	49A0091	49A0091	49A0085	49A0082

 © 2010 ADB Airfield Solutions All Rights Reserved

CHF/XXXX INPUT FUSE BLOCK (Item 11)

SIZE	208 V	220 V	240 V	347 V	480 V
20kW	72A0099	72A0099	72A0099	49A0085	49A0082
30kW	72A0099	72A0099	72A0099	49A0097	49A0085
50kW	N/A	N/A	N/A	N/A	49A0097
70kW	N/A	N/A	N/A	N/A	49A0097

49A0081	Fuse Block, 10-30A, 600V
49A0082	Fuse Block, 31-60A, 600V
49A0085	Fuse Block, 61-100A, 600V
49A0097	Fuse Block, 100-200A, 250V
72A0091	Fuse Block, 2P, 30A, 250V
72A0098	Fuse Block, 31-60A, 250V
72A0099	Fuse Block, 100-200A, 250V

Table 23: L-828 / L-829 Step-Down T4 Transformer Fuses F3 and F4

Fuses F3 and F4 on the L-828/L-829 CCRs protect transformer T4, which supplies 110 Vac and 24 Vac to the universal regulator control card. Transformer T3 Fuses F3 and F4 Ratings

CHF/XXXX T4 Fuses (F3, F4)

SIZE	208 V	220 V	240 V	347 V	480 V
4kW	47A0113	47A0113	47A0113	47A0113	47A0108
7.5kW	47A0113	47A0113	47A0113	47A0113	47A0108
10kW	47A0113	47A0113	47A0113	47A0113	47A0108
15kW	47A0187	47A0187	47A0187	47A0187	47A0187
20kW	47A0187	47A0187	47A0187	47A0187	47A0187
30kW	47A0187	47A0187	47A0187	47A0187	47A0187
50kW	N/A	N/A	N/A	N/A	47A0187
70kW	N/A	N/A	N/A	N/A	47A0187

47A0108	**Fuse 1A 500V**
47A0113	**Fuse 2A 250V**
47A0187	**Fuse 3A 500V**
49A0084	**Fuse Holder (double) (4, 20 - 30 kW)**

Table 24: L-829 Power Supply Transformer Fuse F5 and ACE Power Supply Fuse F6

Universal regulator power supply transformer fuse F5 protects the remote control circuitry on the URC. Fuse F6 protects the 120 Vac power supply to the ACE. Fuses F5 and F6 Ratings

CHF/XXXX ACE Fuses F5, F6

47A0119	Fuse .5A 250V
47A0061	Fuse Block (single)

© 2010 ADB Airfield Solutions All Rights Reserved

Table 25: Current Transformer T2

CHF/XXXX Current Transformer T2

SIZE	6.6 A	20 A
4kW	35A0263	N/A
7.5kW	35A0263	N/A
10kW	35A0263	N/A
15kW	35A0263	35A0308
20kW	35A0263	35A0308
30kW	35A0263	35A0308
50kW	N/A	35A0308
70kW	N/A	35A0308

35A0263 Current Transformer 6.6/6.6A (Only required if analog current meter used)

35A0308 Current Transformer 20/6.6A (Only required if analog current meter used)

Table 26: CHF CCR Contactors

CHF/XXXX CONTACTORS

SIZE	208-240 V	347 V	480 V
4kW	53A0412/25	53A0412/25	53A0412/25
7.5kW	53A0412/50	53A0412/40	53A0412/40
10kW	53A0412/60	53A0412/50	53A0412/40
15kW	53A0412/90	53A0412/75	53A0412/40
20kW	53A0412/120	53A0412/90	53A0412/50
30kW	53A0331	53A0412/150	53A0412/75
50kW	N/A	N/A	53A0412/150
70kW	N/A	N/A	53A0331

53A0331	Contactor 3P 200A 170A 120VAC Coil
53A0412/150	Contactor 2P 150 FLA
53A0412/25	Contactor 2P 25 FLA
53A0412/40	Contactor 2P 40 FLA
53A0412/50	Contactor 2P 50 FLA
53A0412/60	Contactor 2P 60 FLA
53A0412/75	Contactor 2P 75 FLA
53A0412/90	Contactor 2P 90 FLA
53A0431	Contactor 2P 160A 1501-3600V

Table 27: Dual SCR Blocks

CHF/XXXX Dual SCR Block (SCR)

SIZE	208 V	220 V	240 V	347 V	480 V
4kW	28A0056	28A0056	28A0056	28A0056	28A0056
7.5kW	28A0056	28A0056	28A0056	28A0056	28A0056
10kW	28A0056	28A0056	28A0056	28A0056	28A0056
15kW	28A0057	28A0057	28A0057	28A0057	28A0057

© 2010 ADB Airfield Solutions All Rights Reserved

CHF/XXXX Dual SCR Block (SCR)

SIZE	208 V	220 V	240 V	347 V	480 V
20kW	28A0055	28A0055	28A0055	28A0055	28A0055
30kW	28A0054	28A0054	28A0054	28A0054	28A0054
50kW	N/A	N/A	N/A	N/A	28A0037
70kW	N/A	N/A	N/A	N/A	28A0037

28A0037	Dual SCR Module (50, 70 kW)
28A0054	Dual SCR Module (30 kW)
28A0055	Dual SCR Module (20 kW)
28A0056	Dual SCR Module (4, 7.5, 10 kW)
28A0057	Dual SCR Module (15 kW)

Table 28: Power Transformer T1

CHF/XXXX Power Transformer T1 (Core)

SIZE	208 V 6.6A	208 V 20A	220 V 6.6A	220 V 20A	240 V 6.6A	240 V 20A	347 V 6.6A	347 V 20A	480 V 6.6A	480 V 20A
4kW	35A0732		35A0732		35A0732		35A0720		35A0708	
7.5kW	35A0731		35A0731		35A0731		35A0719		35A0707	
10kW	35A0730	35A0736	35A0730	35A0736	35A0730	35A0736	35A0718	35A0724	35A0706	35A0712
15kW	35A0729	35A0735	35A0729	35A0735	35A0729	35A0735	35A0717	35A0723	35A0705	35A0711
20kW	35A0728	35A0734	35A0728	35A0734	35A0728	35A0734	35A0716	35A0722	35A0704	35A0710
30kW	35A0727	35A0733	35A0727	35A0733	35A0727	35A0733	35A0715	35A0721	35A0703	35A0709
50kW	N/A	N/A	N/A	N/A	N/A	N/A	N/A	N/A	N/A	35A0605
70kW	N/A	N/A	N/A	N/A	N/A	N/A	N/A	N/A	N/A	35A0604

Table 29: Power Core List

Power Core List

35A0604	70kW High Efficiency Power Transformer, 480V, 20A
35A0605	50kW High Efficiency Power Transformer, 480V, 20A
35A0703	30kW High Efficiency Power Transformer, 480V, 6.6A
35A0704	20kW High Efficiency Power Transformer, 480V, 6.6A
35A0705	15kW High Efficiency Power Transformer, 480V, 6.6A
35A0706	10kW High Efficiency Power Transformer, 480V, 6.6A
35A0707	7.5kW High Efficiency Power Transformer, 480V, 6.6A
35A0708	4kW High Efficiency Power Transformer, 480V, 6.6A
35A0709	30kW High Efficiency Power Transformer, 480V, 20A
35A0710	20kW High Efficiency Power Transformer, 480V, 20A
35A0711	15kW High Efficiency Power Transformer, 480V, 20A
35A0712	10kW High Efficiency Power Transformer, 480V, 20A
35A0715	30kW High Efficiency Power Transformer, 480/347V, 6.6A

© 2010 ADB Airfield Solutions All Rights Reserved

35A0716	20kW High Efficiency Power Transformer, 480/347V, 6.6A
35A0717	15kW High Efficiency Power Transformer, 480/347V, 6.6A
35A0718	10kW High Efficiency Power Transformer, 480/347V, 6.6A
35A0719	7.5kW High Efficiency Power Transformer, 480/347V, 6.6A
35A0720	4kW High Efficiency Power Transformer, 480/347V, 6.6A
35A0721	30kW High Efficiency Power Transformer, 480/347V, 20A
35A0722	20kW High Efficiency Power Transformer, 480/347V, 20A
35A0723	15kW High Efficiency Power Transformer, 480/347V, 20A
35A0724	10kW High Efficiency Power Transformer, 480/347V, 20A
35A0727	30kW High Efficiency Power Transformer, 208/220/240V, 6.6A
35A0728	20kW High Efficiency Power Transformer, 208/220/240V, 6.6A
35A0729	15kW High Efficiency Power Transformer, 208/220/240V, 6.6A
35A0730	10kW High Efficiency Power Transformer, 208/220/240V, 6.6A
35A0731	7.5kW High Efficiency Power Transformer, 208/220/240V, 6.6A
35A0732	4kW High Efficiency Power Transformer, 208/220/240V, 6.6A
35A0733	30kW High Efficiency Power Transformer, 208/220/240V, 20A
35A0734	20kW High Efficiency Power Transformer, 208/220/240V, 20A
35A0735	15kW High Efficiency Power Transformer, 208/220/240V, 20A
35A0736	10kW High Efficiency Power Transformer, 208/220/240V, 20A

Table 30: Input Lightning Arrestor VR7, VR8

CHF/XXXX Input Lightning Arrestor VR7, VR8

32A0028	Input Power Lightning Assestor (All sizes and input voltages)
	(Kit used is 94B0011)

Table 31: Output Lightning Arrestor

CHF/XXXX Output Lightning Arrestor VR2, VR3, VR4, VR5

SIZE	208 V 6.6A	208 V 20A	220 V 6.6A	220 V 20A	240 V 6.6A	240 V 20A	347 V 6.6A	347 V 20A	480 V 6.6A	480 V 20A
4kW	32A0115	N/A	32A0115	N/A	32A0115	N/A	32A0115	N/A	32A0115	
7.5kW	32A0115	N/A	32A0115	N/A	32A0115	N/A	32A0115	N/A	32A0115	
10kW	32A0115	N/A	32A0115	N/A	32A0115	N/A	32A0115	N/A	32A0115	
15kW	32A0114	32A0115	32A0114	32A0115	32A0114	32A0115	32A0114	32A0115	32A0114	32A0115
20kW	32A0114	32A0115	32A0114	32A0115	32A0114	32A0115	32A0114	32A0115	32A0114	32A0115
30kW	32A0114	32A0114	32A0114	32A0114	32A0114	32A0114	32A0114	32A0114	32A0114	32A0114
50kW	N/A	N/A	N/A	N/A	N/A	N/A	N/A	N/A	N/A	32A0114
70kW	N/A	N/A	N/A	N/A	N/A	N/A	N/A	N/A	N/A	32A0114

Maintenance

© 2010 ADB Airfield Solutions All Rights Reserved

32A0114	Surge Arrestor 6kV
32A0115	Surge Arrestor 6kV

Table 32: T5 Current Sensing Transformer

CHF/XXXX Current Sensing Transformer (T5)

SIZE		
6.6A	35A0548	Transformer, Current Sensing, 6.6A to 66mA
20A	35A0528	Transformer, Current Sensing, 20A to 66mA

Table 33: T4 Power Transformer

CHF/XXXX Power Transformer (T4)

35A0539	240/347/480 V to 120/24 V .5A (4, 7.5, 10 kW)
35A0546	240/347/480 V to 120/24 V .5A (15, 20, 30, 50, 70 kW)

Table 34: CHF/XXXX Other parts

CHF/XXXX Other parts

44A7075/1	URC PC Assembly
44A6397	IRMS-LI Board (Option)
44A6178	Rotary Switch (3 Step)
44A6178/5	Rotary Switch (5 Step)
1475.92.030	SCO Series Circuit Cutout (Option)

Table 35: Current / Voltage Monitor Assembly (CVM)

CHF/XXXX Current / Voltage Monitor Assembly (CVM) (Option)

44A6326/10	Current / Voltage Monitor Assembly (6.6A)
44A6326/11	Current / Voltage Monitor Assembly (20A)

Table 36: Ammeters

CHF/XXXX Ammeter

52A0099	Analog Ammeter (6.6A)
52A0098	Analog Ammeter (20A)

Note: Refer to ACE Manuals for Optional L-829 Monitoring and Control

Table 37: CCF/XXXX Capacitor Plate

44A6107/1	30kW (6.6A and 20A)
44A6107/2	20kW (6.6A) 208 - 480V
44A6107/2	20kW (20A) 208 - 480V
44A6107/3	15kW (6.6A and 20A) 208 - 480V
44A6108/3	10kW 208 - 480V
44A6108/1	7.5kW 208V
44A6217	4kW 208 - 480V
44A6392/07	7.5kW 220 - 480V
44A6483/09	10kW and 30kW 2400V

© 2010 ADB Airfield Solutions All Rights Reserved

44A6483/13	50kW (20A) 480V
44A6483/18	20kW 2400V
44A6483/26	50 kW (20A) and 70kW (20A) 480V

© 2010 ADB Airfield Solutions All Rights Reserved

5.2.3 L-828 General Troubleshooting

This subsection provides general troubleshooting procedures for the L-828 CCR.

WARNING

Read the instructions in their entirety before starting installation.

Only personnel authorized to work on high-voltage equipment should perform maintenance on the regulator.

Since high open-circuit voltages may result by opening the primary of a series lighting circuit, only personnel authorized to work on high-voltage equipment should be allowed to perform the open-circuit test.

Operating a regulator for long periods of time while seriously overloaded may cause the regulator to overheat.

Table 38:

Problem	Possible Cause	Corrective Action
1. Regulator not turning on	Main power supply off	Verify presence of input voltage.
	Switched off due to overcurrent	Switch regulator off in local. Wait for 2 seconds and check to see if the regulator now operates correctly.
	Incorrect external wiring	If the regulator works correctly in local but not in Remote, check the Remote control signals.
	Blown fuse	Replace any blown fuse. Check the input supply voltage and make sure that it is between –5% and +10% of the nominal value listed on the CCR nameplate.
	Defective URC PCB	Replace URC PCB.
2. Regulator turns on but de-energizes suddenly	Output circuit interrupted	Apply a short to the regulator output. Turn the regulator on. If the regulator works correctly, repair the lighting circuit. Follow all safety precautions in this manual.
	Defective printed circuit board	Replace regulator controller.
	Overcurrent condition	Verify that SCR is triggering by replacing the PCB.
		Check feedback transformer T5 for damage and proper connections. Polarity does not affect operation. Compare input voltages across J8-4 to J8-3 with those in “Output Current Monitor Circuitry” on page 5. If the voltage at the terminals is correct for the selected step and the output is not correct, and the difference cannot be corrected by calibrating the regulator as specified in *Output Current Adjustment* in the Operation section.
		Check SCRs and wiring.
		Replace SCR.
		Refer to Problem #11 in this table.
3. Output Current always 6.6 A/20 A or more	Universal regulator controller not calibrated	With regulator set on Step B100 (B5), adjust R40 until a current reading of 6.6 A or 20 A is measured.
		Check remaining steps to verify the values from “Output Current and Limits” on page 12.
	Overcurrent condition	Refer to problem #2 in this table, *Regulator turns on but de-energizes suddenly*.
4. Output Current always 4.8 A or less for 3-Step CCR or 2.8 A or less for 5-Step CCR or 8.5 or less on 20 A	Defective control board	If problem exists in Remote and local control, replace universal regulator controller.
	SCRs always conducting	Verify SCR is triggering by replacing PCB. Check SCRs and wiring for shorts in SCR circuitry. Replace SCR snubber assembly.
		Replace SCR.
	Defective Ferroresonant resonant circuit (transformer or capacitor)	Visually inspect capacitors for damaged housing or wire connections. Visually inspect transformer for damaged coils, connections, and/or wiring.
		Faulty capacitors will exhibit a bulging case.
	CCR overload	Remove section of load.
5. More than 2 seconds required for CCR to de-energize on open-circuit load	Faulty overcurrent protection	Replace URC PCB.

Maintenance

© 2010 ADB Airfield Solutions All Rights Reserved

Problem	Possible Cause	Corrective Action
6. Short lamp life and/or high output current reading on panel ammeter	Incorrect output current adjustment	Refer to “Output Current Adjustment” on page 31.
	Faulty overcurrent protection	Replace URC PCB.
7. Regulator not indicating proper current	Incorrect output current adjustment	Refer to Output Current Adjustment in the Operation section. Refer to Problem #11 in this table.
	Current meter not calibrated or faulty	Turn the regulator to the top step (6.6 A/20 A). Verify the current with a true-rms current meter. If the meter is not accurate, adjust the meter with the screw on the front cover. For systems equipped with ACE, refer to: • Advanced Control Equipment (ACE) manual 96A0287 or • Advanced Control Equipment (ACE2) manual 96A0357 for display calibration procedures. Refer to Problem #11 in this table.
8. Regulator operates by the local control switch but not by Remote control	The rotary switch on the input module not set to REM	Set the rotary switch to REM.
	Blown fuse	Check fuse F5.
	Loose or broken Remote control wires	Check connections on Remote terminal block TB1. If 120 Vac Remote control signals are used, use an AC voltmeter (300 Vac scale) to verify correct signals are received at the CCR.
	Incorrect wire connections	Refer to Table 12 through Table 14.
9. Ammeter on CCR oscillates and loud noise occurs	SCR drive not working properly	Check connections at SCR module. Replace URC PCB. Refer to Problem #11 in this table.
10. Output current not able to be adjusted up to 6.6 A/20 A	Regulator load too large	Either reduce the load or replace the regulator with a larger kW CCR. When overloaded, the regulator may make a faint bouncing sound as the controller bounces against the upper control limits. **NOTE:** This problem can also be verified by shorting the output of the CCR and verifying output current can be adjusted correctly in each step.
11. 5-Step regulator (in Steps 1 or 2) emitting loud hum, not indicating proper current, and operating erratically	Light inductive load (for example, signs)	Increase load on regulator. If you cannot increase the load, verify that you are dealing with the right problem by placing a current clamp on the output of the regulator and measuring the frequency of the output. Investigate to see if the problem occurs in Highest Step

5.3 Additional L-829 General Troubleshooting Procedures

For additional L-829 CCR general troubleshooting procedures, refer to the *Troubleshooting* section in manuals:

- 96A0287, Advanced Control Equipment (ACE™) or
- 96A0357, Advanced Control Equipment (ACE2™).

 © 2010 ADB Airfield Solutions All Rights Reserved

5.4 Component Replacement Procedures

5.4.1 Removing and Replacing URC PCB

1. Turn CCR local switch to the OFF position.

Figure 31: URC PCB

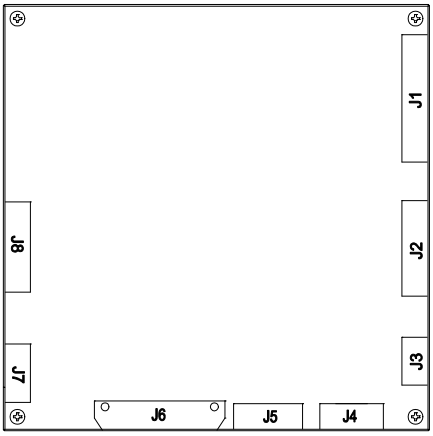

2. Remove and lock out/tag out primary power to the CCR at the breaker panel.
3. Lock out/tag out the SCO in the maintenance position.
4. Loosen the door latch screws and open the CCR door.
5. Unplug green connectors J8, J1, J2, J3, J4, and J5 from the PCB.
6. Disconnect the ribbon cable from J6 by pressing out on the tabs at both sides of the ribbon connection and pull the cable away from the board.
7. Remove the 4 screws at the 4 corners of the PCB. Remove the ground wire from the top right corner. Remove and label the ground wire from the top left corner of the PCB.
8. Mount the new PCB by replacing the 4 screws at the corners of the PCB including the ground wire on the top right corner.
9. Plug the ribbon cable back into J6 by pressing it in. It is keyed and will only go in one way. Also verify the tabs on the side have locked into place.
10. Plug in all of the green connectors to the board. J8, J1, J2, J3, J4, and J5.
11. Close the CCR door and loosen the door latch screws.
12. Restore the SCO to the ON position.
13. Restore primary power to the CCR at the breaker panel.
14. Turn the CCR local switch to the REM position.

5.4.2 Removing and Replacing Dual SCR Module Assembly

See Internal Wiring Schematic, 43A2522.dwg in “Wiring Schematics” on page 65.

© 2010 ADB Airfield Solutions All Rights Reserved

Figure 32: Dual SCR Module Assembly

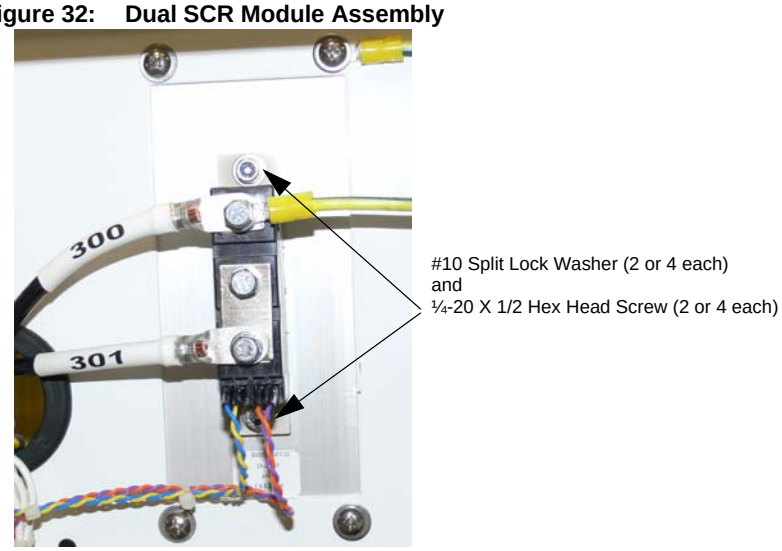

1. Turn CCR local switch to the OFF position.
2. Remove and lock out/tag out primary power to the CCR at the breaker panel.
3. Lock out/tag out the SCO in the maintenance position.
4. Open the CCR front door by loosening the 3 door screws.
5. Remove wire 300 and the ground wire from the top lug of the SCR using a 11/16-inch socket. *note: There are different versions of this SCR so hardware may vary.
6. Remove wire 301 from the bottom lug of the SCR using a 11/16-inch socket.
7. Pull the 4 colored gate wires from the bottom of the SCR.
8. Remove the SCR from the regulator by removing the (2) 5/32-hex mounting screws. Clean the heat-sink surface with a dry rag.
9. The replacement SCR will arrive mounted to a rectangular metal plate.
10. Remove the SCR from the attached plate by removing the (2) 5/32-hex mounting screws from the new SCR and the mounting it to the existing plate in the front of the regulator. Place a thin layer of thermal paste on the heat-sink prior to attaching the SCR.
11. Once the SCR is mounted in the CCR, connect wire 300 and the ground wire to the top lug of the SCR.
12. Connect wire 301 to the bottom lug of the SCR.
13. Connect the colored gate wires according to the documentation supplied with the replacement SCR. Different versions of the SCR require these gate wires to be connected in a different order, refer to the documentation shipped with the replacement SCR.
14. Close all doors and replace all panels.
15. Restore the SCO to the ON position.
16. Restore primary power to the CCR at the breaker panel.
17. Turn the CCR local switch to the REM position.

© 2010 ADB Airfield Solutions All Rights Reserved

5.4.3 Removing and Replacing Contactor

1. Turn CCR local switch to the OFF position.

Figure 33: CCR Power Contactor

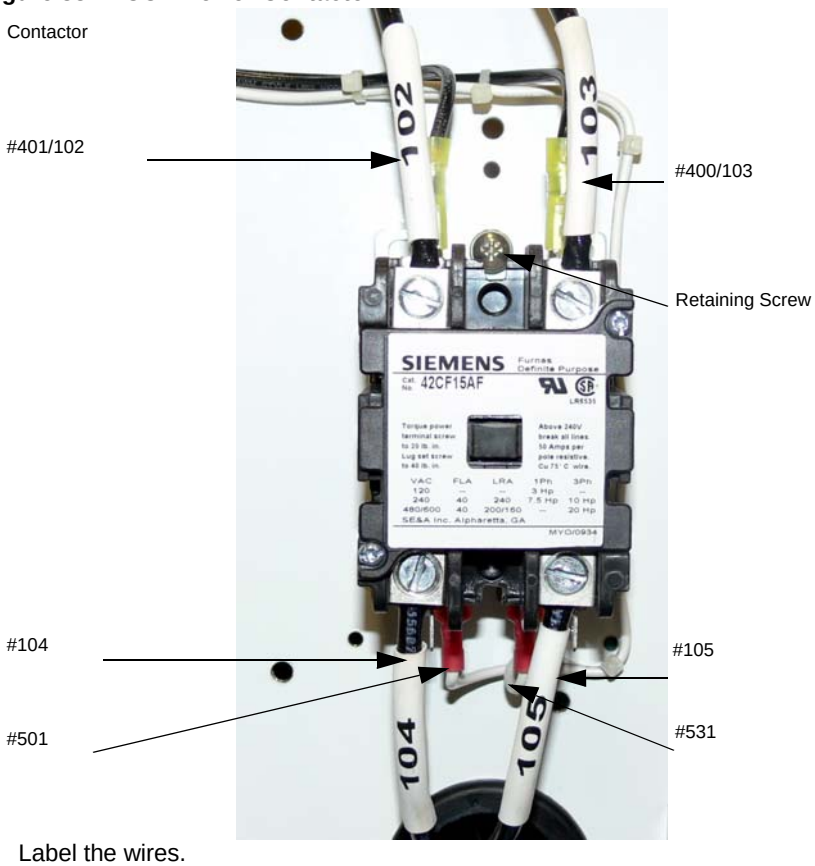

2. Label the wires.
3. Remove and lock out/tag out primary power to the CCR at the breaker panel.
4. Lock out/tag out the SCO in the maintenance position.
5. Open the CCR front door by loosening the 3 door screws.
6. Loosen the wire retaining lugs for 102, 103, 104 and 105 and disconnect. See Internal Wiring Schematic, 43A2522.dwg in “Wiring Schematics” on page 65.
7. Label any wires not labeled prior to disconnecting them.
8. Remove wires 400 and 401 from the top connectors of the contactor.
9. Remove the wires 531 and 501 from the contactor coil connections at the bottom of the contactor.
10. Remove the 3 mounting screws until the contactor is free.
11. Replace the contactor. Tighten the contactor retaining screws on the contactor plate.
12. Connect wires 531 and 501 to the contactor coil connections at the bottom of the contactor.
13. Connect wires 400 and 401 to the top connectors of the contactor.
14. Connect the wires for 102, 103, 104 and 105 and tighten retaining lugs.
15. Close the CCR front door by tightening the 3 door screws.
16. Restore the SCO to the ON position.
17. Restore primary power to the CCR at the breaker panel.
18. Turn the CCR local switch to the REM position.

© 2010 ADB Airfield Solutions All Rights Reserved

5.4.4 Removing and Replacing Input Lightning Arrestors (front of Component Mounting Plate)

1. Turn CCR local switch to the OFF position.
2. Remove and lock out/tag out primary power to the CCR at the breaker panel.
3. Lock out/tag out the SCO in the maintenance position.
4. Open the CCR front door by loosening the 3 door screws.
5. Loosen the wire retaining screws for 100, 402, 101, 403, 802 and 803 and disconnect. See Internal Wiring Schematic, 43A2522.dwg in “Wiring Schematics” on page 65.
6. Remove the top two of (4) #10 x 32 pan-head screws and loosen the bottom two screws until the arrestors are free.
7. Replace the Input Lightning Arrestor assembly. Replace the two top screws on the assembly plate and tighten all four until the arrestors are secure.
8. Connect the wires for 100, 402, 101, 403, 802 and 803 and tighten retaining screws.
9. Close the CCR front door by tightening the 3 door screws.
10. Restore the SCO to the ON position.
11. Restore primary power to the CCR at the breaker panel.
12. Turn the CCR local switch to the REM position.

5.4.5 Removing and Replacing Output Lightning Arrestors (front of Component Mounting Plate)

1. Turn CCR local switch to the OFF position.
2. Remove and lock out/tag out primary power to the CCR at the breaker panel.
3. Lock out/tag out the SCO in the maintenance position.
4. Remove the side panel of the CCR, by removing the 8 mounting screws. Be careful as you will also need to disconnect the ground wire attached from the frame to the panel.

Figure 34: Output Lightning Arrestors

5. Loosen the 11/16-inch wire retaining nuts for 200, 201, 203, ST1, ST2 and 202 and disconnect.
6. Remove the (4) #10 x 32 pan-head screws and retain until later.
7. Replace the Input Lightning Arrestor assembly. Replace and tighten the screws on the assembly plate.
8. Connect the wires for 200, 201, 203, ST1, ST2 and 202 and tighten retaining nuts.
9. Connect the ground wire from the frame to the side panel.
10. Put the side panel back on the CCR with the 8 screws.
11. Restore the SCO to the ON position.
12. Restore primary power to the CCR at the breaker panel.
13. Turn the CCR local switch to the REM position.

 © 2010 ADB Airfield Solutions All Rights Reserved

6.0 Parts and Mechanical Drawings

Figure 35: Ordering Codes

Ordering Code **CHFXXXX-XXXX**

Amperage
66 = 6.6A output
20 = 20A output

Size
04 = 4kW, 6.6A only
07 = 7.5kW, 6.6A only
10 = 10kW, 6.6A only
15 = 15kW
20 = 20kW
30 = 30kW
50 = 50kW, 20A only
70 = 70kW, 20A only

Output Range
3 = 3-step without Series Cutout[1]
4 = 3-step with Series Cutout[1]
5 = 5-step without Series Cutout
6 = 5-step with Series Cutout

Input Voltage
1 = 208, 4-30kW only
2 = 240, 4-30kW only
3 = 480
4 = 347, 4-30kW only
5 = 220, 4-30kW only

Monitoring Options (See Application Notes)
0 = None (Standard L-828)
1 = ALCMS Scanning Monitor Interface
2 = ALCMS Scanning Monitor Ready
3 = L-829 Monitoring (ACE)
4 = Insulation Resistance Monitoring System (IRMS) Ready
5 = L-829 Monitoring (ACE) and IRMS
6 = L-828 with Digital Power Meter

CCR Input/Output Monitoring
0 = No optional CCR input or output circuit monitoring[2]
A = With L-829 or IRMS monitoring; without optional input CCR monitoring[3]
G= With L-829 or IRMS monitoring; with optional input CCR monitoring[3]

Notes
- A ferroresonant CCR is preferred for airports that require low output harmonic content (EMI) or that have varying loads, such as Runway Guard Lights using incandescent (tungsten-halogen) lamps, L-849 REILs using xenon flash lamps, or Runway Status Lights (RWSL)
- Runway Guard Lights using incandescent (tungsten-halogen) lamps should be powered with ferroresonant type CCRs and not with thyristor type CCRs

[1] 3-step, 20A is not standard FAA operation. ADB Airfield Solutions can offer a non-ETL Certified Style 1, Class 2 CCR for dedicated 5.5A sign circuits or other needs. Please contact the ADB Sales Department for more details.
[2] Used only with Monitoring Options 0, 1, 2, and 6.
[3] Used only with Monitoring Options 3 and 5.

© 2010 ADB Airfield Solutions All Rights Reserved

Figure 36: CHF 4 kW CHF6604-XXXX

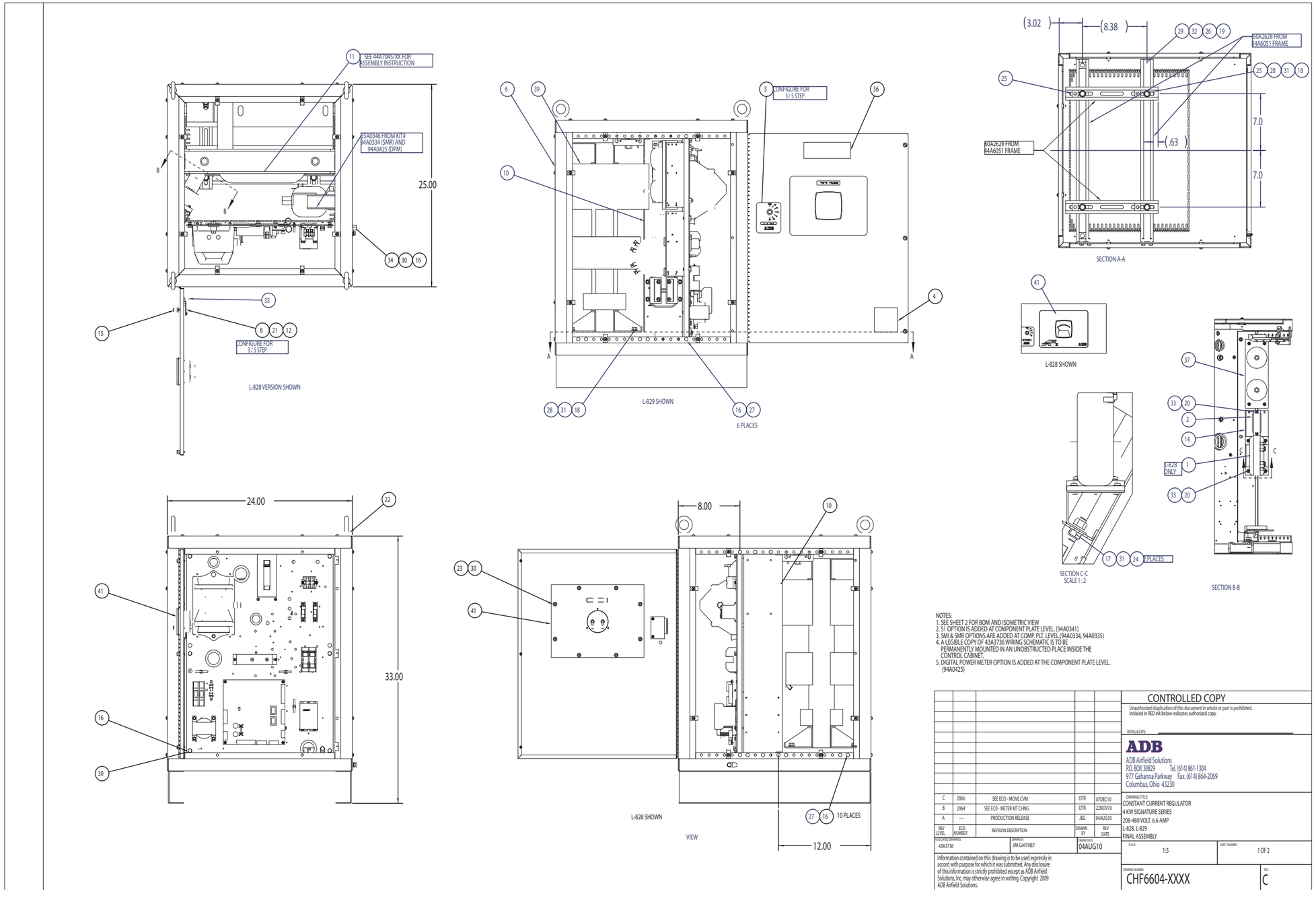

© 2010 ADB Airfield Solutions All Rights Reserved

Figure 37: CHF 4 kW CHF6604-XXXX

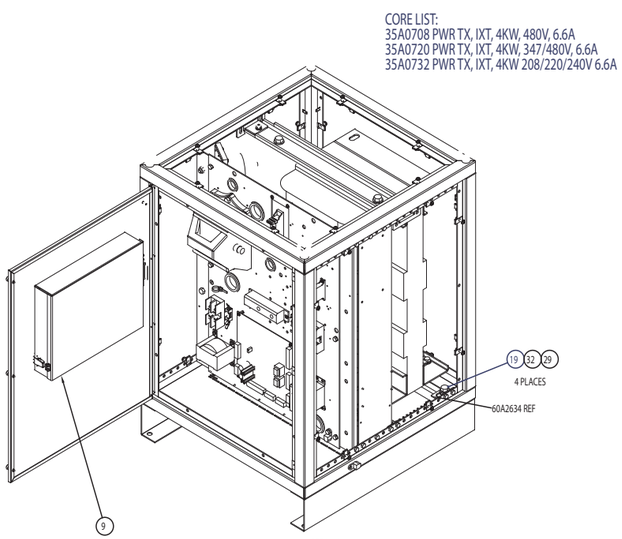

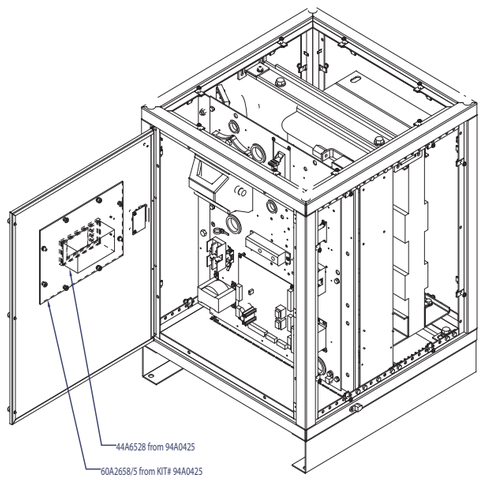

ITEM NO.	PART NUMBER	DESCRIPTION	3200	323A	3240	325A	3300	333A	3340	335A	5200	523A	5240	525A	5300	533A	5340	535A	3260
1	35A0263	CURRENT TX 6.6/6.6 L828	1	-	1	-	1	-	1	-	1	-	1	-	1	-	1	-	-
2	35A0548	TX CURRNT SENSE 6.6A-66mA w/TWISTD LEADS	1	1	1	1	1	1	1	1	1	1	1	1	1	1	1	1	1
3	42A0525-3	ROTARY SWITCH LABEL 3 STEP FERRO	1	1	1	1	1	1	1	1	-	-	-	-	-	-	-	-	1
3	42A0525-5	ROTARY SWITCH LABEL 5 STEP FERRO	-	-	-	-	-	-	-	-	1	1	1	1	1	1	1	1	-
4	42B0269	LABEL L828	1	1	1	1	1	1	1	1	1	1	1	1	1	1	1	1	1
5	44A6006-0007	CABLE FIBER OPTIC 7 FEET	-	1	2	3	-	1	2	3	-	1	2	3	-	1	2	3	-
6	44A6051	SMALL CABINET ASSEMBLY	1	1	1	1	1	1	1	1	1	1	1	1	1	1	1	1	1
7	44A6139-1	HARN ASSY, CCF, ACE, 4KW	-	1	-	1	-	1	-	1	-	1	-	1	-	1	-	1	-
8	44A6178-X	PCB ASSY 34-PIN HDR/SW ADAPTOR 3(5)-STEP	1	1	1	1	1	1	1	1	1	1	1	1	1	1	1	1	1
9	44A6508-1110	ACE II INTERNAL ASSY LCD DISPLAY W/LOM	-	1	-	1	-	1	-	1	-	1	-	1	-	1	-	1	-
10	44A7035-04	CAP PLATE ASSEM., IXT SMALL FRAME	1	1	1	1	1	1	1	1	1	1	1	1	1	1	1	1	1
11	44A7045-S	SHIPPING STRAP, 4-7.5KW IXT, SUB ASSE	1	1	1	1	1	1	1	1	1	1	1	1	1	1	1	1	1
12	66A0039-4	#6 EXT LOCKWASHER	2	2	2	2	2	2	2	2	2	2	2	2	2	2	2	2	2
13	44A7052-320	4K COMP PLT (IXT) 3/5S, 240V, 6.6A, L-828	1	-	-	-	-	-	-	-	1	-	-	-	-	-	-	-	-
13	44A7052-323	4K COMP PLT (IXT) 3/5S, 240V, 6.6A, L-829	-	1	-	-	-	-	-	-	-	1	-	-	-	-	-	-	-
13	44A7052-324	4K COMP PLT (IXT) 3/5S, 240V, 6.6A, L-828+ IRMS	-	-	1	-	-	-	-	-	-	-	1	-	-	-	-	-	-
13	44A7052-325	4K COMP PLT (IXT) 3/5S, 240V, 6.6A, L-829+ IRMS	-	-	-	1	-	-	-	-	-	-	-	1	-	-	-	-	-
13	44A7052-326	4K COMP PLT (IXT) 3/5S, 240V, 6.6A, L-828 + DPM	-	-	-	-	-	-	-	-	-	-	-	-	-	-	-	-	1
13	44A7052-330	4K COMP PLT (IXT) 3/5S, 480V, 6.6A, L-828	-	-	-	-	1	-	-	-	-	-	-	-	1	-	-	-	-
13	44A7052-333	4K COMP PLT (IXT) 3/5S, 208V, 6.6A, L-829	-	-	-	-	-	1	-	-	-	-	-	-	-	1	-	-	-
13	44A7052-334	4K COMP PLT (IXT) 3/5S, 480V, 6.6A, L-828+ IRMS	-	-	-	-	-	-	1	-	-	-	-	-	-	-	1	-	-
13	44A7052-335	4K COMP PLT (IXT) 3/5S, 480V, 6.6A, L-829+ IRMS	-	-	-	-	-	-	-	1	-	-	-	-	-	-	-	1	-
14	60A3114	SURGE ARRESTOR MTG BRACKET	1	1	1	1	1	1	1	1	1	1	1	1	1	1	1	1	1
15	61A0340	KNOB 3FLUTE 1/8"SHAFT ALUM BLK	1	1	1	1	1	1	1	1	1	1	1	1	1	1	1	1	1
16	64A0173-10	1/4-20 X 5/8 HX HD	23	23	23	23	23	23	23	23	23	23	23	23	23	23	23	23	23
17	64A0176-12	3/8-16 X 3/4 HX HD	2	2	2	2	2	2	2	2	2	2	2	2	2	2	2	2	2
18	64A0176/16	3/8-16 X 1 HX HD	8	8	8	8	8	8	8	8	8	8	8	8	8	8	8	8	8
19	64A0178-16	1/2-13 X 1 HX HD	4	4	4	4	4	4	4	4	4	4	4	4	4	4	4	4	4
20	64A0191-6	8-32 X 3/8 PAN HD PHIL	6	2	6	2	6	2	6	2	6	2	6	2	6	2	6	2	2
21	64A0198-8	6-32 X 1/2 PAN HD PHIL	2	2	2	2	2	2	2	2	2	2	2	2	2	2	2	2	2
22	64A0947	EYEBOLT 1/2-13X1.5 1.19ID 2600	4	4	4	4	4	4	4	4	4	4	4	4	4	4	4	4	4
23	65A0015/24	1/4-20 HX NUT, SS	8	8	8	8	8	8	8	8	8	8	8	8	8	8	8	8	8
24	65A0015-29	3/8-16 HX NUT	2	2	2	2	2	2	2	2	2	2	2	2	2	2	2	2	2
25	65A0180-5	SPRING NUT 3/8-16 PSRS	10	10	10	10	10	10	10	10	10	10	10	10	10	10	10	10	10
26	65A0180-6	SPRING NUT 1/2-13 PSRS	4	4	4	4	4	4	4	4	4	4	4	4	4	4	4	4	4
27	65A0347-4	1/4-20 SS NYLON INSERT NUT	16	16	16	16	16	16	16	16	16	16	16	16	16	16	16	16	16
28	66A0015-29	3/8 FLATWASHER	8	8	8	8	8	8	8	8	8	8	8	8	8	8	8	8	8
29	66A0015-33	1/2 FLATWASHER	4	4	4	4	4	4	4	4	4	4	4	4	4	4	4	4	4
30	66A0026/24	1/4 SPLIT LOCKWASHER	15	15	15	15	15	15	15	15	15	15	15	15	15	15	15	15	15
31	66A0026-29	3/8 SPLIT LOCKWASHER	10	10	10	10	10	10	10	10	10	10	10	10	10	10	10	10	10
32	66A0026-33	1/2 SPLIT LOCKWASHER	4	4	4	4	4	4	4	4	4	4	4	4	4	4	4	4	4
33	66A0039-5	#8 EXT LOCKWASHER SS	6	2	6	2	6	2	6	2	6	2	6	2	6	2	6	2	2
34	72A0010	GROUND LUG	1	1	1	1	1	1	1	1	1	1	1	1	1	1	1	1	1
35	89A0209-24	RIBBON CABLE ASSY,34-POS W/CONNS,24"	1	1	1	1	1	1	1	1	1	1	1	1	1	1	1	1	1
36	91A0033	LBL L828 DANGER HIGH VOLTAGE	1	1	1	1	1	1	1	1	1	1	1	1	1	1	1	1	1
37	94A0433-3	SURGE ARR. KIT, SIG. SRS. REGULATOR, 3KV	1	1	1	1	1	1	1	1	1	1	1	1	1	1	1	1	1
38	94A0561-1241	PWR WIRE KIT IXT 4KW 240V W/ACE	-	1	-	1	-	-	-	-	-	1	-	1	-	-	-	-	-
39	SEE CORE LIST	4-7.5KW IXT PWR TX, XXXV, 6.6A	1	1	1	1	1	1	1	1	1	1	1	1	1	1	1	1	1
40	94A0561-2482	PWR WIRE KIT CCFR 7.5 & 10KW 480V W/ACE	1	-	1	-	1	1	1	1	1	-	1	-	1	1	1	1	1
41	44A7050-XXX	L-828 METER KIT, SIG SRS REGULATORS	1	-	1	-	1	-	1	-	1	-	1	-	1	-	1	-	-

HIGH EFFICIENCY FERRO

CHF6604/ X X X X

FIELD CIRCUITS MONITORED :
0 = NO INPUT MONITORING, NO FIELD CIRCUIT MONITORING
A = SINGLE CHANNEL LAMPS OUT MONITORING.

MONITORING OPTIONS :
0 = NONE.
1 = SCANNING MONITOR INTERFACE. (NOTE 3)
2 = SCANNING MONITOR READY. (NOTE 3)
3 = L 829.
4 = IRMS ONLY.
5 = L 829 AND IRMS.
6 = DIGITAL POWER METER

INPUT VOLTAGE :
1 = 208.
2 = 240.
3 = 480.
4 = 347 .
5 = 220.

OUTPUT RANGE :
3 = 3 STEP WITHOUT S1 CUTOUT.
4 = 3 STEP WITH S1 CUTOUT. (NOTE 2)
5 = 5 STEP WITHOUT S1 CUTOUT.
6 = 5 STEP WITH S1 CUTOUT. (NOTE 2)

REV LEVEL	ECO NUMBER	REVISION DESCRIPTION	DRAWN BY	REV DATE
C	2866	SEE ECO - MOVE CVM	DTR	07DEC10
B	2964	SEE ECO - METER KIT CHNG	DTR	22NOV10
A	----	PRODUCTION RELEASE	JEG	04AUG10

ORIGINATOR NUMBER	DRAWN BY	DRAWN DATE
43A3736	JIM GAFFNEY	04AUG10

Information contained on this drawing is to be used expressly in accord with purpose for which it was submitted. Any disclosure of this information is strictly prohibited except as ADB Airfield Solutions, Inc. may otherwise agree in writing. Copyright 2010 ADB Airfield Solutions.

CONTROLLED COPY

Unauthorized duplication of this document in whole or part is prohibited.
Initialed in RED ink below indicates authorized copy.

INITIAL & DATE:

ADB
ADB Airfield Solutions
P.O. BOX 30829 Tel. (614) 861-1304
977 Gahanna Parkway Fax. (614) 864-2069
Columbus, Ohio 43230

DRAWING TITLE:
CONSTANT CURRENT REGULATOR
4 KW SIGNATURE SERIES
208-480 VOLT, 6.6 AMP
L-828, L-829
FINAL ASSEMBLY

SCALE: 1:6
SHEET NUMBER: 2 OF 2
DRAWING NUMBER: CHF6604-XXXX
REV: C

Parts

Figure 38: CHF 7-10-15 kW CHF6615-XXXX

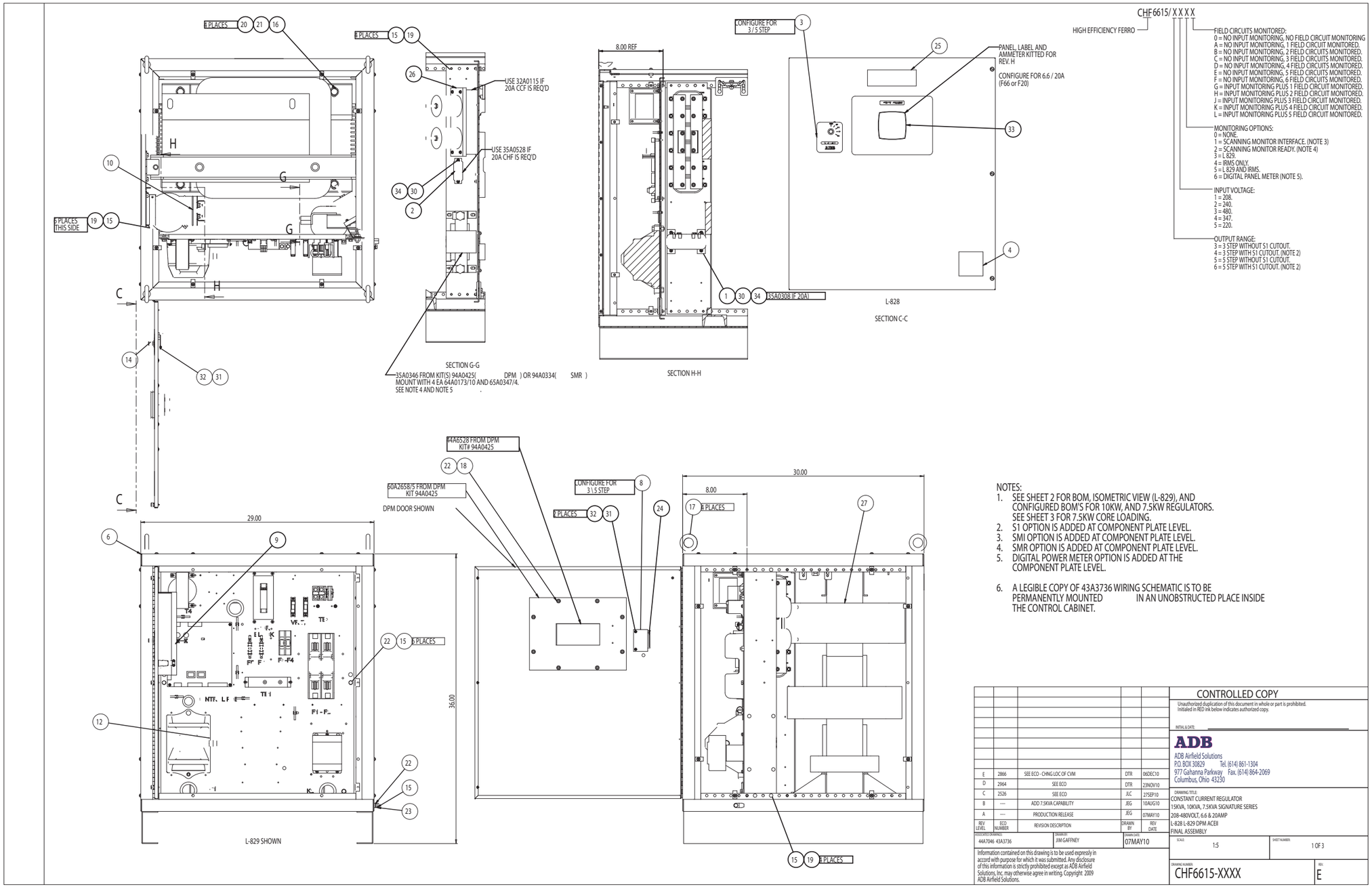

© 2010 ADB Airfield Solutions All Rights Reserved

Figure 39: CHF 7-10-15 kW CHF6615-XXXX

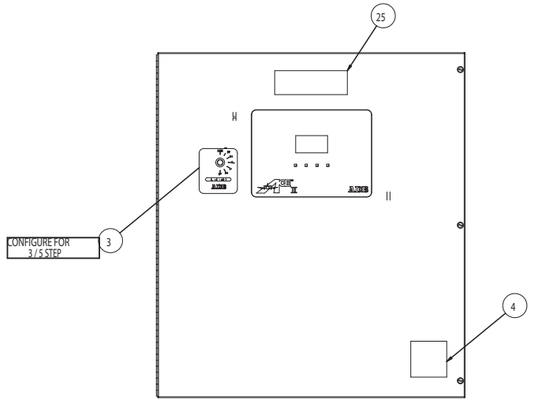

L-829 DOOR

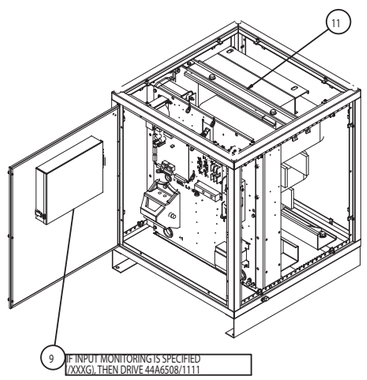

CCF6615/325A SHOWN

	IXT POWER CORE LIST, 10-15KW
35A0705	15KW IXT PWR TX, 480V, 6.6A
35A0706	10KW IXT PWR TX, 480V, 6.6A
35A0707	7.5KW IXT PWR TX, 480V, 6.6A
35A0711	15KW IXT PWR TX, 480V, 20A
35A0717	15KW IXT PWR TX, 480/347V, 6.6A
35A0718	10KW IXT PWR TX, 480/347V, 6.6A
35A0719	7.5KW IXT PWR TX, 480/347V, 6.6A
35A0723	15KW IXT PWR TX, 480/347V, 20A
35A0729	15KW IXT PWR TX, 208/220/240V, 6.6A
35A0730	10KW IXT PWR TX, 208/220/240V, 6.6A
35A0731	7.5KW IXT PWR TX, 208/220/240V, 6.6A
35A0735	15KW IXT PWR TX, 208/220/240V, 20A

ITEM NO.	PART NUMBER	DESCRIPTION	3200	323A	3240	325A	3300	3260	3310	3320	333A	3340	335A	5200	523A	5240	525A	5300	533A	5340	535A
1	35A0263	CURRENT TX 6.6/6.6 L828	1	-	1	-	1	-	1	1	-	1	-	1	-	1	-	1	-	1	-
2	35A0548	TX CURRNT SENSE 6.6A-66mA w/TWISTD LEADS	1	1	1	1	1	1	1	1	1	1	1	1	1	1	1	1	1	1	1
3	42A0525-3	ROTARY SWITCH LABEL 3 STEP FERRO	1	1	1	1	1	1	1	1	1	1	1	-	-	-	-	-	-	-	-
3	42A0525-5	ROTARY SWITCH LABEL 5 STEP FERRO	-	-	-	-	-	-	-	-	-	-	-	1	1	1	1	1	1	1	1
4	42B0269	LABEL L828	1	1	1	1	1	1	1	1	1	1	1	1	1	1	1	1	1	1	1
5	44A6006-0007	FIBER OPTIC CABLE ASSEM. X 7 FEET	-	1	2	3	-	-	-	-	1	2	3	-	1	2	3	-	1	2	3
6	44A6056-2	MEDIUM CABINET ASSEMBLY	1	1	1	1	1	1	1	1	1	1	1	1	1	1	1	1	1	1	1
7	44A6139-2	HARN ASSY, CCF, ACE2-E, 7.5-30KW	1	1	-	1	-	-	-	-	1	-	1	-	1	-	1	-	1	-	1
8	44A6178	PCB ASSY 34-PIN HDR/SW ADAPTOR	1	1	1	1	1	1	1	1	1	1	1	1	1	1	1	1	1	1	1
9	44A6508-1110	ACE II INTERNAL ASSY LCD DISPLAY W/LOM	-	1	-	1	-	-	-	-	1	-	1	-	1	-	1	-	1	-	1
10	44A7032-XX	CAP PLT ASSY 10-15KW IXT	1	1	1	1	1	1	1	1	1	1	1	1	1	1	1	1	1	1	1
11	44A7045-M	SHIPPING STRAP, 10-15KW IXT, SUB ASSE	1	1	1	1	1	1	1	1	1	1	1	1	1	1	1	1	1	1	1
12	44A7046-320	COMP PLATE ASSEM., 15 KVA, 240V, 6.6A IXT	1	-	-	-	-	-	-	-	-	-	-	1	-	-	-	-	-	-	-
12	44A7046-323	COMP PLT 15KW 3/5S L829 240V 6.6	-	1	-	-	-	-	-	-	-	-	-	-	1	-	-	-	-	-	-
12	44A7046-324	COMP PLT 15KW 3/5S L828 240V 6.6A IRMS ONLY	-	-	1	-	-	-	-	-	-	-	-	-	-	1	-	-	-	-	-
12	44A7046-325	COMP PLT 15KW 3/5S L829+ IRMS 240V 6.6A IRMS	-	-	-	1	-	-	-	-	-	-	-	-	-	-	1	-	-	-	-
12	44A7046-326	COMP PLATE ASSEM., 15 KVA, 240V, 6.6A L-828 W/DPM	-	-	-	-	-	1	-	-	-	-	-	-	-	-	-	-	-	-	-
12	44A7046-330	COMP PLATE ASSEM., 15 KVA, 480V, 6.6A IXT	-	-	-	-	1	-	-	-	-	-	-	-	-	-	-	1	-	-	-
12	44A7046-331	COMP PLT 15KW 3/5S L828 480V 6.6A SMI ONLY	-	-	-	-	-	-	1	-	-	-	-	-	-	-	-	-	-	-	-
12	44A7046-332	COMP PLT 15KW 3/5S L828 480V 6.6A SMR	-	-	-	-	-	-	-	1	-	-	-	-	-	-	-	-	-	-	-
12	44A7046-333	COMP PLT 15KW 3/5S L829 480V 6.6 IXT	-	-	-	-	-	-	-	-	1	-	-	-	-	-	-	-	1	-	-
12	44A7046-334	COMP PLT 15KW 3/5S L828 480V 6.6A IRMS ONLY	-	-	-	-	-	-	-	-	-	1	-	-	-	-	-	-	-	1	-
12	44A7046-335	COMP PLT 15KW 3/5S L829+ IRMS 480V 6.6A	-	-	-	-	-	-	-	-	-	-	1	-	-	-	-	-	-	-	1
14	61A0340	KNOB 3FLUTE 1/8"SHAFT ALUM BLK	1	1	1	1	1	1	1	1	1	1	1	1	1	1	1	1	1	1	1
15	64A0173-10	1/4-20 X 5/8 HX HD	18	17	17	17	17	21	17	21	17	17	17	17	17	17	17	17	17	17	17
16	64A0178-16	1/2-13 X 1 HX HD	4	4	4	4	4	4	4	4	4	4	4	4	4	4	4	4	4	4	4
17	64A0947	EYEBOLT 1/2-13X1.5 1.19ID 2600	4	4	4	4	4	4	4	4	4	4	4	4	4	4	4	4	4	4	4
18	65A0015/24	1/4-20 HX NUT, SS	8	8	8	8	8	8	8	8	8	8	8	8	8	8	8	8	8	8	8
19	65A0347-4	1/4-20 SS NYLON INSERT NUT	11	10	10	10	10	14	10	14	10	10	10	10	10	10	10	10	10	10	10
20	66A0015-33	1/2 FLATWASHER	4	4	4	4	4	4	4	4	4	4	4	4	4	4	4	4	4	4	4
21	66A0026-33	1/2 SPLIT LOCKWASHER	4	4	4	4	4	4	4	4	4	4	4	4	4	4	4	4	4	4	4
22	66A0026/24	1/4 SPLIT LOCKWASHER	15	15	15	15	15	15	15	15	15	15	15	15	15	15	15	15	15	15	15
23	72A0010	GROUND LUG	1	1	1	1	1	1	1	1	1	1	1	1	1	1	1	1	1	1	1
24	89A0209-24	RIBBON CABLE ASSY,34-POS W/CONNS,24"	1	1	1	1	1	1	1	1	1	1	1	1	1	1	1	1	1	1	1
25	91A0033	LBL L828 DANGER HIGH VOLTAGE	2	2	2	2	2	2	2	2	2	2	2	2	2	2	2	2	2	2	2
26	94A0433-6	SURGE ARR. KIT, SIG. SRS. REGULATOR, 6KV	1	1	1	1	1	1	1	1	1	1	1	1	1	1	1	1	1	1	1
27	SEE CORE LIST	10-15KW IXT PWR TX, 208-480V, 6.6A/20A	1	1	1	1	1	1	1	1	1	1	1	1	1	1	1	1	1	1	1
29	94A0561-4XXX	PWR WIRE KIT IXT 20&30KW (XXX)V W/ACE	1	1	1	1	1	1	1	1	1	1	1	1	1	1	1	1	1	1	1
32	66A0039-4	#6 EXT LOCKWASHER	2	2	2	2	2	2	2	2	2	2	2	2	2	2	2	2	2	2	2
33	44A7050-XXX	L-828 METER KIT, SIG SRS REGULATORS	1	-	1	-	1	-	1	1	-	1	-	1	-	1	-	1	-	1	-
34	66A0039-5	#8 EXT LOCKWASHER SS	6	2	6	2	6	2	6	6	2	6	2	6	2	6	2	6	2	6	2

BUILD 10KW AND 7.5KW CCR'S BY USING THIS DRAWING AND CONFIGURING THE PARTS BELOW.
FOR 20A REGULATORS, CONFIGURE THE FOLLOWING (7.5&10KW NOT APPLICABLE):
1. POWER CORE (SEE CORE LIST)
2. SURGE ARRESTOR (15KW, 6.6 = 94A0433-6)(15KW, 20A = 94A0433-3)(10KW, 6.6 = 94A0433-3)
3. CURRENT SENSING TRANSFORMER (35A0528 ON ALL 20A)
4. AMMETER KIT (SEE 44A7050/XXX)

REPLACEMENT ITEMS FOR 7.5KW, 208-480V **(SEE SHEET 3)

ITEM NUMBER	PART NUMBER	DESCRIPTION	CHF6607-3200/QTY.	CHF6607-3222A/QTY.	CHF6607-3240/QTY.	CHF6607-3300/QTY.	CHF6607-333A/QTY.	CHF6607-3340/QTY.	CHF6607-335A/QTY.	CHF6607-5200/QTY.	CHF6607-522A/QTY.	CHF6607-5240/QTY.	CHF6607-525A/QTY.	CHF6607-5300/QTY.	CHF6607-533A/QTY.	CHF6607-5340/QTY.	CHF6607-535A/QTY.
27	SEE CORE LIST	PWR TX, 7.5KW, 6.6A/20A, 208-480V FERRO	1	1	1	1	1	1	1	1	1	1	1	1	1	1	1
10	44A7032/07	CAP PLT ASSY 7.5 KW IXT CCR	1	1	1	1	1	1	1	1	1	1	1	1	1	1	1
12	44A7069-320	7.5 KVA COMP PLT ASSEM.,6.6A, 208-480V, SIG SRS	1	-	-	-	-	-	-	1	-	-	-	-	-	-	-
	44A7069-323	7.5 KVA COMP PLT ASSEM.,6.6A, 208-480V, SIG SRS	-	1	-	-	-	-	-	-	1	-	-	-	-	-	-
	44A7069-324	7.5 KVA COMP PLT ASSEM.,6.6A, 208-480V, SIG SRS	-	-	1	-	-	-	-	-	-	1	-	-	-	-	-
	44A7069-325	7.5 KVA COMP PLT ASSEM.,6.6A, 208-480V, SIG SRS	-	-	-	1	-	-	-	-	-	-	1	-	-	-	-
	44A7069-330	7.5 KVA COMP PLT ASSEM.,6.6A, 208-480V, SIG SRS	-	-	-	-	1	-	-	-	-	-	-	1	-	-	-
	44A7069-333	7.5 KVA COMP PLT ASSEM.,6.6A, 208-480V, SIG SRS	-	-	-	-	-	1	-	-	-	-	-	-	1	-	-
	44A7069-334	7.5 KVA COMP PLT ASSEM.,6.6A, 208-480V, SIG SRS	-	-	-	-	-	-	1	-	-	-	-	-	-	1	-
	44A7069-335	7.5 KVA COMP PLT ASSEM.,6.6A, 208-480V, SIG SRS	-	-	-	-	-	-	-	1	-	-	-	-	-	-	1
26	94A 0433/3	SURGE ARR. KIT, SIG. SRS. REGULATOR, 3KV	1	1	1	1	1	1	1	1	1	1	1	1	1	1	1
	94A0561/3 XXX	PWR WIRING KIT CHF 7.5KW XXXV	1	1	1	1	1	1	1	1	1	1	1	1	1	1	1

REPLACEMENT ITEMS FOR 10KW, 240-480V

ITEM NUMBER	PART NUMBER	DESCRIPTION	CHF6610-3200/QTY.	CHF6610-3222A/QTY.	CHF6610-3240/QTY.	CHF6610-3300/QTY.	CHF6610-333A/QTY.	CHF6610-3340/QTY.	CHF6610-335A/QTY.	CHF6610-5200/QTY.	CHF6610-522A/QTY.	CHF6610-5240/QTY.	CHF6610-525A/QTY.	CHF6610-5300/QTY.	CHF6610-533A/QTY.	CHF6610-5340/QTY.	CHF6610-535A/QTY.
27	SEE CORE LIST	PWR TX, 10KW, 6.6A/20A, 208-480V FERRO	1	1	1	1	1	1	1	1	1	1	1	1	1	1	1
10	44A7032/10	CAP PLT ASSY 10 KW IXT CCR	1	1	1	1	1	1	1	1	1	1	1	1	1	1	1
12	44A7047-320	10 KVA COMP PLT ASSEM.,6.6A, 208-480V, SIG SRS	1	-	-	-	-	-	-	1	-	-	-	-	-	-	-
	44A7047-323	10 KVA COMP PLT ASSEM.,6.6A, 208-480V, SIG SRS	-	1	-	-	-	-	-	-	1	-	-	-	-	-	-
	44A7047-324	10 KVA COMP PLT ASSEM.,6.6A, 208-480V, SIG SRS	-	-	1	-	-	-	-	-	-	1	-	-	-	-	-
	44A7047-325	10 KVA COMP PLT ASSEM.,6.6A, 208-480V, SIG SRS	-	-	-	1	-	-	-	-	-	-	1	-	-	-	-
	44A7047-330	10 KVA COMP PLT ASSEM.,6.6A, 208-480V, SIG SRS	-	-	-	-	1	-	-	-	-	-	-	1	-	-	-
	44A7047-333	10 KVA COMP PLT ASSEM.,6.6A, 208-480V, SIG SRS	-	-	-	-	-	1	-	-	-	-	-	-	1	-	-
	44A7047-334	10 KVA COMP PLT ASSEM.,6.6A, 208-480V, SIG SRS	-	-	-	-	-	-	1	-	-	-	-	-	-	1	-
	44A7047-335	10 KVA COMP PLT ASSEM.,6.6A, 208-480V, SIG SRS	-	-	-	-	-	-	-	1	-	-	-	-	-	-	1
26	94A0433-3	SURGE ARR. KIT, SIG. SRS. REGULATOR, 3KV	1	1	1	1	1	1	1	1	1	1	1	1	1	1	1
	94A0561 -3XXX	PWR WIRING KIT CHF 10KW XXXV W/ACE	1	1	1	1	1	1	1	1	1	1	1	1	1	1	1

REV LEVEL	ECO NUMBER	REVISION DESCRIPTION	DRAWN BY	REV DATE
E	2866	SEE ECO - CHNG LOC OF CVM	DTR	06DEC10
D	2964	SEE ECO	DTR	23NOV10
C	2526	SEE ECO	JLC	27SEP10
B	----	ADD 7.5KVA CAPABILITY	JEG	10AUG10
A	----	PRODUCTION RELEASE	JEG	07MAY10

REDUCED DRAWING: 44A7046 43A3736
DRAWN BY: JIM GAFFNEY
DRAWN DATE: 07MAY10

Information contained on this drawing is to be used expressly in accord with purpose for which it was submitted. Any disclosure of this information is strictly prohibited except as ADB Airfield Solutions, Inc. may otherwise agree in writing. Copyright 2009 ADB Airfield Solutions.

CONTROLLED COPY
Unauthorized duplication of this document in whole or part is prohibited.
Initialed in RED ink below indicates authorized copy.
INITIAL & DATE:

ADB
ADB Airfield Solutions
P.O. BOX 30829 Tel. (614) 861-1304
977 Gahanna Parkway Fax. (614) 864-2069
Columbus, Ohio 43230

DRAWING TITLE:
CONSTANT CURRENT REGULATOR
15KVA, 10KVA, 7.5KVA SIGNATURE SERIES
208-480VOLT, 6.6 & 20AMP
L-828 L-829 DPM ACEII
FINAL ASSEMBLY

SCALE: 1:5
SHEET NUMBER: 2 OF 3
DRAWING NUMBER: CHF6615-XXXX
REV: E

Parts

© 2010 ADB Airfield Solutions All Rights Reserved

Figure 40: CHF 7-10-15 kW CHF6615-XXXX

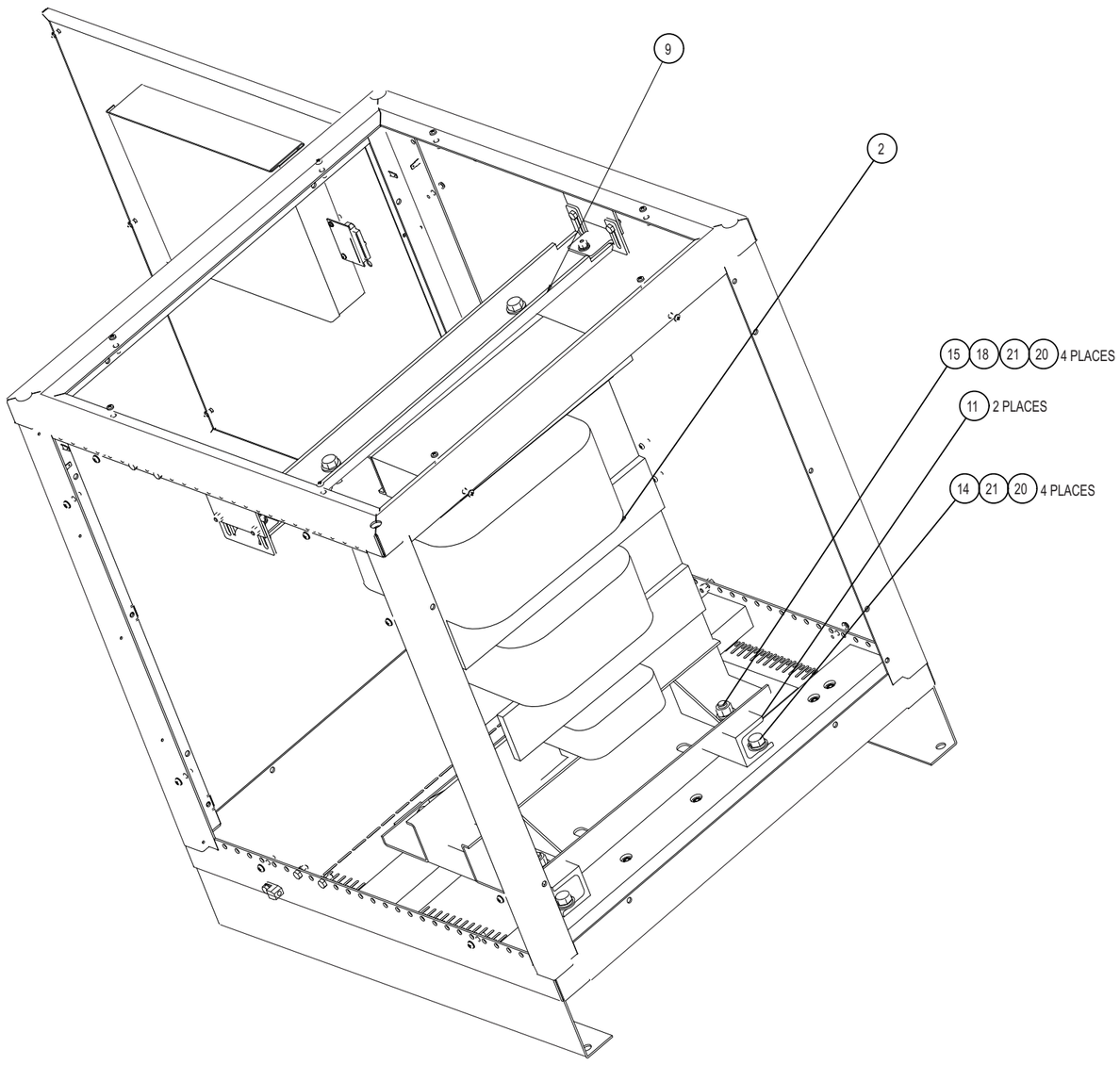

7.5KW CORE LOADING

7.5KW CORE LOADING REFERENCE		
ITEM NO.	PART NUMBER	DESCRIPTION
2	35A0719	7.5KW IXT PWR TX, 347/480V, 6.6A
9	44A7045-M7	SHIPPING STRAP, 4-7.5KW IXT, SUB ASSE
11	60A4234	MTG CHANNEL, 7.5KW IXT
14	64A0178-16	1/2-13 X 1 HX HD
15	64A0178-20	1/2-13 X 1&1/4 HEX HD
18	65A0015/33	1/2-13 HX NUT
20	66A0015-33	1/2 FLATWASHER
21	66A0026-33	1/2 SPLIT LOCKWASHER
27	94A0561-4XXX	PWR WIRE KIT IXT 20&30KW {XXX}V W/ACE
30	66A0039-4	#6 EXT LOCKWASHER
31	66A0039-5	#8 EXT LOCKWASHER SS

REV LEVEL	ECO NUMBER	REVISION DESCRIPTION	DRAWN BY	REV DATE
E	2866	SEE ECO - CHNG LOC OF CVM	DTR	06DEC10
D	2964	SEE ECO	DTR	23NOV10
C	2526	SEE ECO	JLC	27SEP10
B	----	ADD 7.5KVA CAPABILITY	JEG	10AUG10
A	----	PRODUCTION RELEASE	JEG	07MAY10

DRAWING NUMBER: 44A7046 43A3736 | DRAWN BY: JIM GAFFNEY | DRAWN DATE: 10AUG10

Information contained on this drawing is to be used expressly in accord with purpose for which it was submitted. Any disclosure of this information is strictly prohibited except as ADB Airfield Solutions, Inc. may otherwise agree in writing. Copyright 2009 ADB Airfield Solutions.

CONTROLLED COPY
Unauthorized duplication of this document in whole or part is prohibited.
Initialed in RED ink below indicates authorized copy.
INITIAL & DATE

ADB
ADB Airfield Solutions
P.O. BOX 30829 Tel. (614) 861-1304
977 Gahanna Parkway Fax. (614) 864-2069
Columbus, Ohio 43230

DRAWING TITLE
CONSTANT CURRENT REGULATOR
15KVA, 10KVA, 7.5KVA SIGNATURE SERIES
208-480VOLT, 6.6 & 20AMP
L-828 L-829 DPM ACEI
FINAL ASSEMBLY

SCALE: 1:4 | SHEET NUMBER: 3 OF 3

DRAWING NUMBER: CHF6615-XXXX | REV: E

Parts

© 2010 ADB Airfield Solutions All Rights Reserved

Figure 41: CHF 20-30 kW CHF6630-XXXX

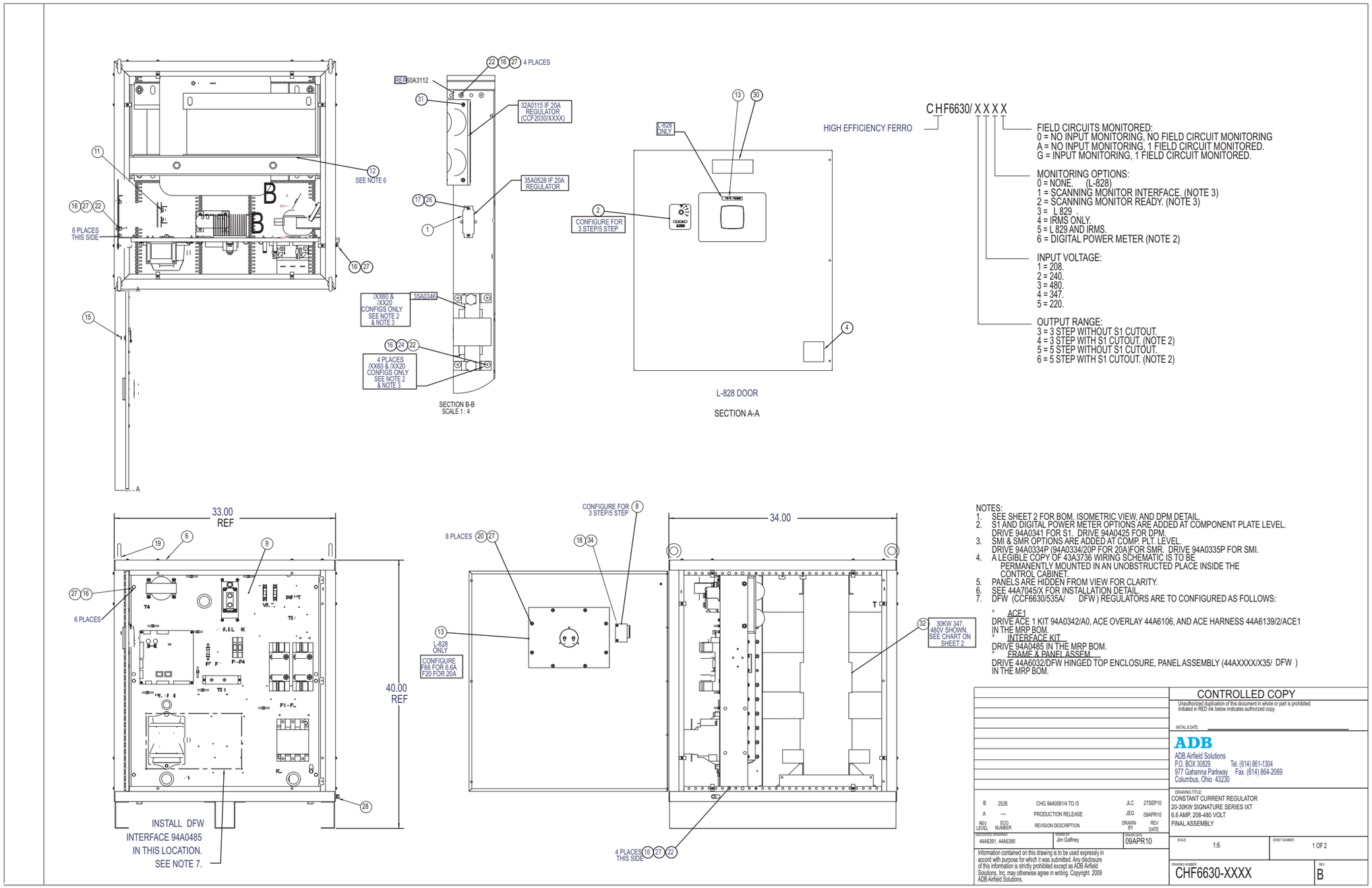

© 2010 ADB Airfield Solutions All Rights Reserved

Figure 42: CHF 20-30 kW CHF6630-XXXX

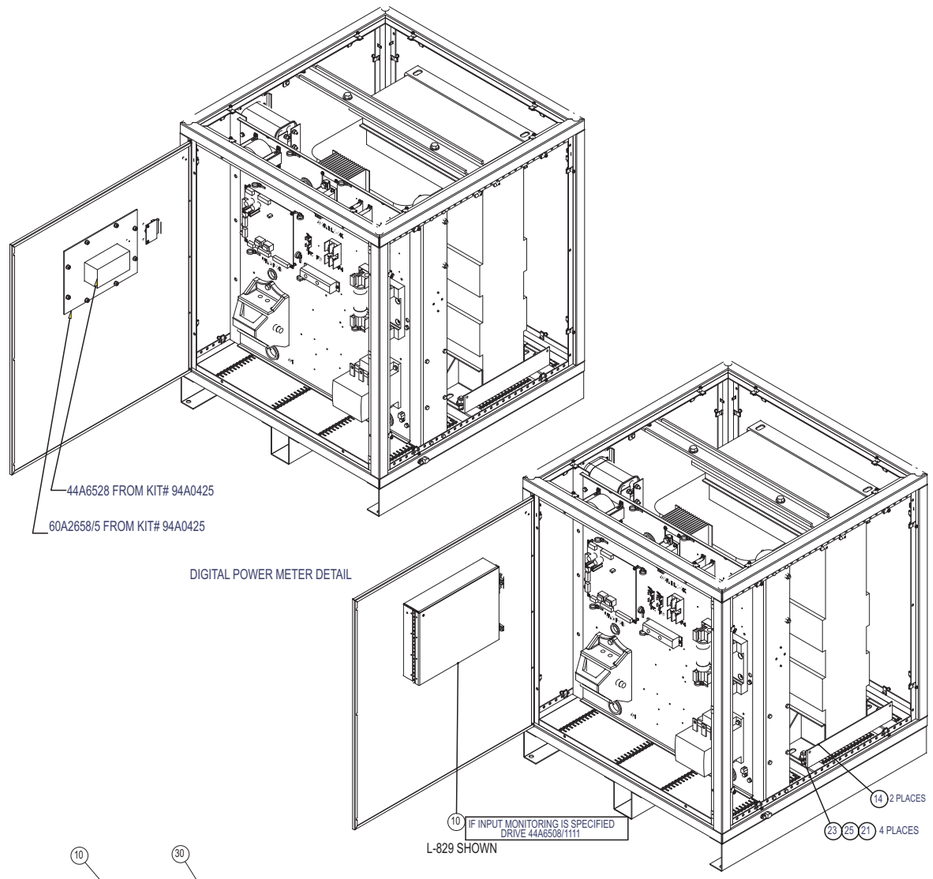

L-829 SHOWN

ITEM NO.	PART NUMBER	DESCRIPTION	CHF6630-3200/QTY.	CHF6630-323A/QTY.	CHF6630-3240/QTY.	CHF6630-325A/QTY.	CHF6630-3300/QTY.	CHF6630-333A/QTY.	CHF6630-3340/QTY.	CHF6630-335A/QTY.	CHF6630-5200/QTY.	CHF6630-523A/QTY.	CHF6630-5240/QTY.	CHF6630-525A/QTY.	CHF6630-5300/QTY.	CHF6630-533A/QTY.	CHF6630-5340/QTY.	CHF6630-535A/QTY.	CHF6630-3260/QTY.
1	35A0548	TX CURRNT SENSE 6.6A-66mA w/TWISTD LEADS	1	1	1	1	1	1	1	1	1	1	1	1	1	1	1	1	1
2	42A0525-3	ROTARY SWITCH LABEL 3 STEP FERRO	1	1	1	1	1	1	1	1	-	-	-	-	-	-	-	-	1
3	42A0525-5	ROTARY SWITCH LABEL 5 STEP FERRO	-	-	-	-	-	-	-	-	1	1	1	1	1	1	1	1	-
4	42B0269	LABEL L828	1	1	1	1	1	1	1	1	1	1	1	1	1	1	1	1	1
5	44A6006-0007	FIBER OPTIC CABLE ASSEM. X 7 FEET	-	1	2	3	-	1	2	3	-	1	2	3	-	1	2	3	-
6	44A6032-2	LARGE CABINET ASSEM. IXT	1	1	1	1	1	1	1	1	1	1	1	1	1	1	1	1	1
7	44A6139-2	HARN ASSY, CCF, ACE2-E, 7.5-30KW	-	1	-	1	-	1	-	1	-	1	-	1	-	1	-	1	-
8	44A6178-X	PCB ASSY 34-PIN HDR/SW ADAPTOR 3(5)-STEP	1	1	1	1	1	1	1	1	1	1	1	1	1	1	1	1	1
9	44A6391-335	COMP PNL ASSEMBLY, 30KW, 6.6A, 480V, L-829 + IRMS	-	-	-	-	-	-	-	1	-	-	-	-	-	-	-	1	-
9	44A6391-320	COMP PNL ASSEMBLY, 30KW, 6.6A, 240V, L-828	1	-	-	-	-	-	-	-	1	-	-	-	-	-	-	-	1
9	44A6391-323	COMP PNL ASSEMBLY, 30KW, 6.6A, 240V, L-829	-	1	-	-	-	-	-	-	-	1	-	-	-	-	-	-	-
9	44A6391-324	COMP PNL ASSEMBLY, 30KW, 6.6A, 240V, L-828 + IRMS	-	-	1	-	-	-	-	-	-	-	1	-	-	-	-	-	-
9	44A6391-325	COMP PNL ASSEMBLY, 30KW, 6.6A, 240V, L-829 + IRMS	-	-	-	1	-	-	-	-	-	-	-	1	-	-	-	-	-
9	44A6391-330	COMP PNL ASSEMBLY, 30KW, 6.6A, 480V, L-828	-	-	-	-	1	-	-	-	-	-	-	-	1	-	-	-	-
9	44A6391-333	COMP PNL ASSEMBLY, 30KW, 6.6A, 480V, L-829	-	-	-	-	-	1	-	-	-	-	-	-	-	1	-	-	-
9	44A6391-334	COMP PNL ASSEMBLY, 30KW, 6.6A, 480V, L-828 + IRMS	-	-	-	-	-	-	1	-	-	-	-	-	-	-	1	-	-
10	44A6508-1110	ACE II INTERNAL LCD DISPLAY WITH LOM	-	1	-	1	-	1	-	1	-	1	-	1	-	1	-	1	-
11	44A7026-30	CAP PLT ASSEM., 20-30 KVA SIGNATURE SERIES	1	1	1	1	1	1	1	1	1	1	1	1	1	1	1	1	1
12	44A7045-L	SHIPPING STRAP, 20-30KW IXT, SUB ASSE	1	1	1	1	1	1	1	1	1	1	1	1	1	1	1	1	1
13	44A7050-XXX	L-828 METER KIT, SIG SRS REGULATORS	1	-	1	-	1	-	1	-	1	-	1	-	1	-	1	-	-
14	60A4143	SUPPORT ANGLE, IXT FERRO	2	2	2	2	2	2	2	2	2	2	2	2	2	2	2	2	2
15	61A0340	KNOB 3FLUTE 1/8"SHAFT ALUM BLK	1	1	1	1	1	1	1	1	1	1	1	1	1	1	1	1	1
16	64A0173-10	1/4-20 X 5/8 HX HD	21	21	21	21	21	21	21	21	21	21	21	21	21	21	21	21	21
17	64A0191/8	8-32 X 1/2 PAN HD PHIL	2	2	2	2	2	2	2	2	2	2	2	2	2	2	2	2	2
18	64A0198-6	6-32 X 3/8 PAN HD PHIL	2	2	2	2	2	2	2	2	2	2	2	2	2	2	2	2	2
19	64A0947	EYEBOLT 1/2-13X1.5 1.19ID 2600	4	4	4	4	4	4	4	4	4	4	4	4	4	4	4	4	4
20	65A0015/24	1/4-20 HX NUT, SS	8	8	8	8	8	8	8	8	8	8	8	8	8	8	8	8	8
21	65A0015/33	1/2-13 HX NUT	4	4	4	4	4	4	4	4	4	4	4	4	4	4	4	4	4
22	65A0347-4	1/4-20 SS NYLON INSERT NUT	14	14	14	14	14	14	14	14	14	14	14	14	14	14	14	14	14
23	66A0015-33	1/2 FLATWASHER	4	4	4	4	4	4	4	4	4	4	4	4	4	4	4	4	4
24	66A0015/24	1/4 FLATWASHER	4	4	4	4	4	4	4	4	4	4	4	4	4	4	4	4	4
25	66A0026-33	1/2 SPLIT LOCKWASHER	4	4	4	4	4	4	4	4	4	4	4	4	4	4	4	4	4
26	66A0026/15	#8 SPLIT LOCKWASHER	3	3	3	3	3	3	3	3	3	3	3	3	3	3	3	3	3
27	66A0026/24	1/4 SPLIT LOCKWASHER	25	25	25	25	25	25	25	25	25	25	25	25	25	25	25	25	25
28	72A0010	GROUND LUG	1	1	1	1	1	1	1	1	1	1	1	1	1	1	1	1	1
29	89A0209-24	RIBBON CABLE ASSY,34-POS W/CONNS,24"	1	1	1	1	1	1	1	1	1	1	1	1	1	1	1	1	1
30	91A0033	LBL L828 DANGER HIGH VOLTAGE	1	1	1	1	1	1	1	1	1	1	1	1	1	1	1	1	1
31	94A0433-6	SURGE ARR. KIT, SIG. SRS. REGULATOR, 6KV	1	1	1	1	1	1	1	1	1	1	1	1	1	1	1	1	1
32	SEE CORE LIST	20-30KW IXT PWR TX, 208-480V, 6.6A/20A	1	1	1	1	1	1	1	1	1	1	1	1	1	1	1	1	1
33	94A0561-5	PWR WIRE KIT IXT 15KW {XXX}V W/ACE	1	1	1	1	1	1	1	1	1	1	1	1	1	1	1	1	1
34	66A0039-4	#6 EXT LOCKWASHER	2	2	2	2	2	2	2	2	2	2	2	2	2	2	2	2	2

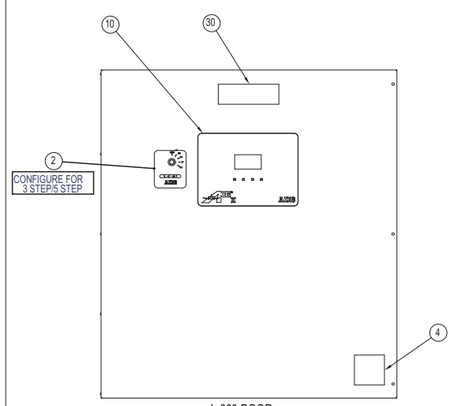

L-829 DOOR

	POWER CORE LIST 20-30 IXT
35A0703	30KW IXT PWR TX, 480V, 6.6A
35A0704	20KW IXT PWR TX, 480V, 6.6A
35A0709	30KW IXT PWR TX, 480V, 20A
35A0710	20KW IXT PWR TX, 480V, 20A
35A0715	30KW IXT PWR TX, 480/347V, 6.6A
35A0716	20KW IXT PWR TX, 480/347V, 6.6A
35A0721	30KW IXT PWR TX, 480/347V, 20A
35A0722	20KW IXT PWR TX, 480/347V, 20A
35A0727	30KW IXT PWR TX, 208/220/240V, 6.6A
35A0728	20KW IXT PWR TX, 208/220/240V, 6.6A
35A0733	30KW IXT PWR TX, 208/220/240V, 20A
35A0734	20KW IXT PWR TX, 208/220/240V, 20A

BUILD 20KW CCR'S USING THIS DRAWING AND CONFIGURING THE PARTS BELOW.
FOR 20A REGULATORS (CCF2030/XXXX), CONFIGURE THE FOLLOWING:
1. POWER CORE (SEE CORE LIST)
2. SURGE ARRESTOR (6.6A = 32A0114, 20A = 32A0115)
3. CURRENT SENSING TRANSFORMER (35A0528 FOR 20A)
4. AMMETER (44A7050/

ITEM NO.	PART NUMBER	DESCRIPTION	20KW, 240-480V SHOWN. OTHER VOLTAGE INPUTS ARE CONFIGURED SIMALARLY															
			CHF6620-3200	CHF6620-323A	CHF6620-3240	CHF6620-325A	CHF6620-3300	CHF6620-333A	CHF6620-3340	CHF6620-335A	CHF6620-5200	CHF6620-523A	CHF6620-5240	CHF6620-525A	CHF6620-5300	CHF6620-533A	CHF6620-5340	CHF6620-535A
32	35A07XX	SEE LIST OF POWER CORES	1	1	1	1	1	1	1	1	1	1	1	1	1	1	1	1
9	44A6390-XXX	COMP PLT ASSEM. 20KW, 6.6A, 240-480V	320	323	324	325	330	333	334	335	320	323	324	325	330	333	334	335
11	44A7026-20	CAP PLT ASSY 20 KW (2004) CCR	1	1	1	1	1	1	1	1	1	1	1	1	1	1	1	1

REV LEVEL	ECO NUMBER	REVISION DESCRIPTION	DRAWN BY	REV DATE
B	2526	CHG 94A056114 TO /5	JLC	27SEP10
A	----	PRODUCTION RELEASE	JEG	09APR10

MANUFACTURE DRAWING: 44A6391, 44A6390 — DRAWN BY: Jim Gaffney — DRAWN DATE: 09APR10

Information contained on this drawing is to be used expressly in accord with purpose for which it was submitted. Any disclosure of this information is strictly prohibited except as ADB Airfield Solutions, Inc. may otherwise agree in writing. Copyright 2009 ADB Airfield Solutions.

CONTROLLED COPY

Unauthorized duplication of this document in whole or part is prohibited.
Initialed in RED ink below indicates authorized copy.

INITIAL & DATE:

ADB
ADB Airfield Solutions
P.O. BOX 30829 Tel. (614) 861-1304
977 Gahanna Parkway Fax. (614) 864-2069
Columbus, Ohio 43230

DRAWING TITLE:
CONSTANT CURRENT REGULATOR
20-30KW SIGNATURE SERIES IXT
6.6 AMP, 208-480 VOLT
FINAL ASSEMBLY

SCALE: 1:6 — SHEET NUMBER: 2 OF 2

DRAWING NUMBER: CHF6630-XXXX — REV: B

© 2010 ADB Airfield Solutions All Rights Reserved

Parts

7.0 Wiring Schematics

This section provides wiring schematics for the ADB L-828/L-829 Ferroresonant constant current regulators (CCRs) (4-70 kW/6.6 A/20 A) with universal regulator controller (URC) cards.

NOTE: For the ACE to URC PCB internal wiring diagram for Ferroresonant CCRs (3 and 5 Step), refer to the Wiring Schematics section in Advanced Control Equipment (ACE) manual 96A0287 or Advanced Control Equipment (ACE2) manual 96A0357. For Powerpack internal wiring diagram for Ferroresonant CCRs (3 and 5 Step), refer to the Wiring Schematics drawing 43A3736 Sheet 1 & 2.

Figure 43: Ferroresonant L828/L829, 4-30kW, 6.6A - 20A Internal Wiring Schematic (43A3736 1 of 2)

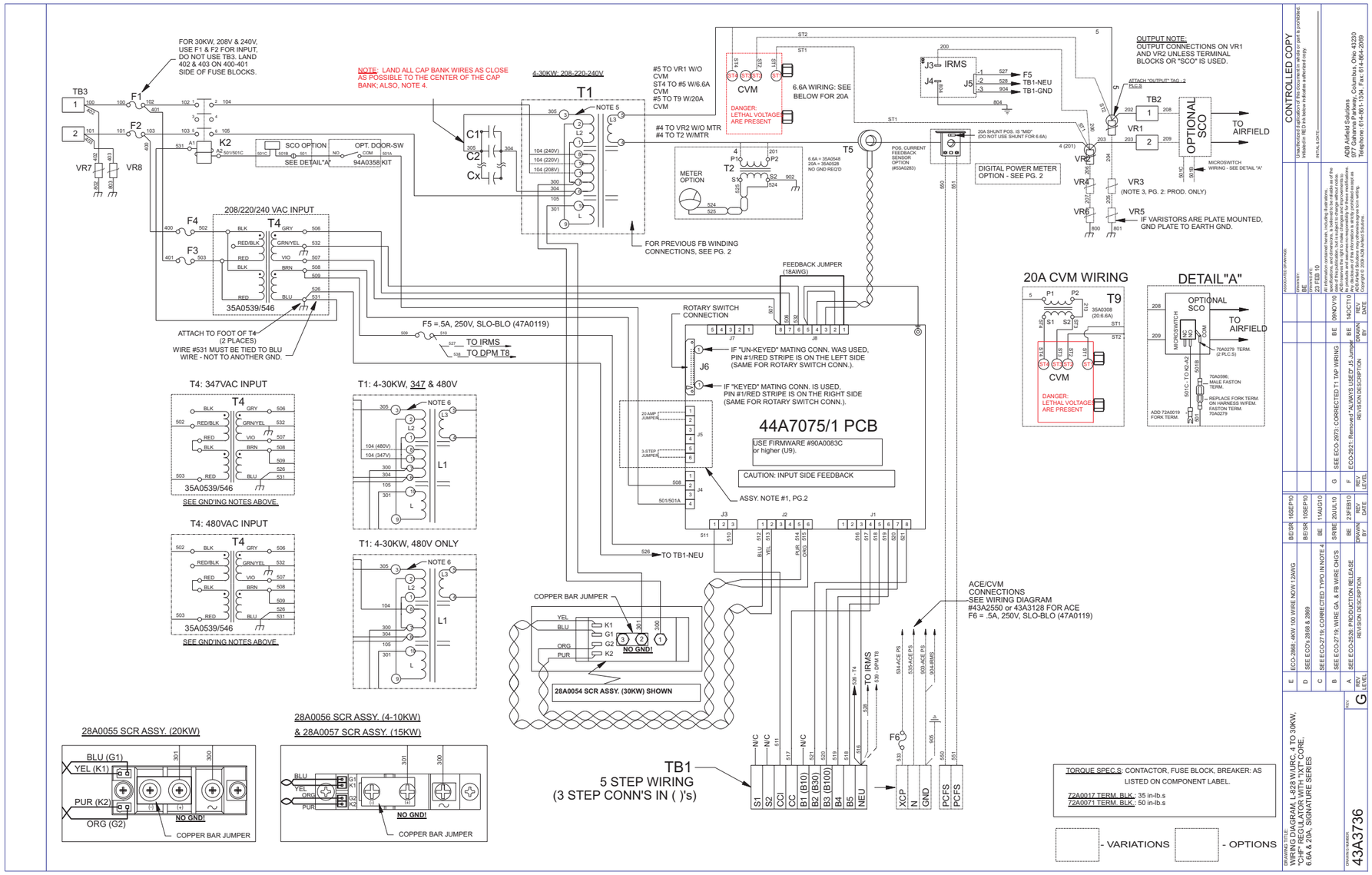

Schematics

Figure 44: Ferroresonant L828/L829, 4-30kW, 6.6A - 20A , Internal Wiring Schematic (43A3736 2 of 2)

PREVIOUS FEED BACK WINDING CONNECTIONS

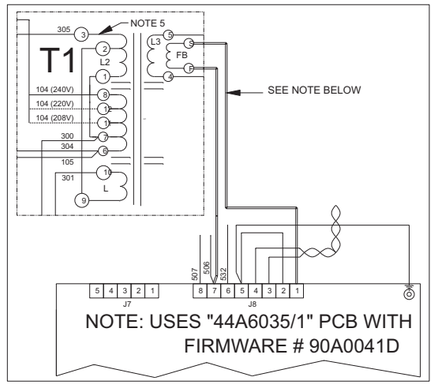

DIGITAL POWER METER OPTION

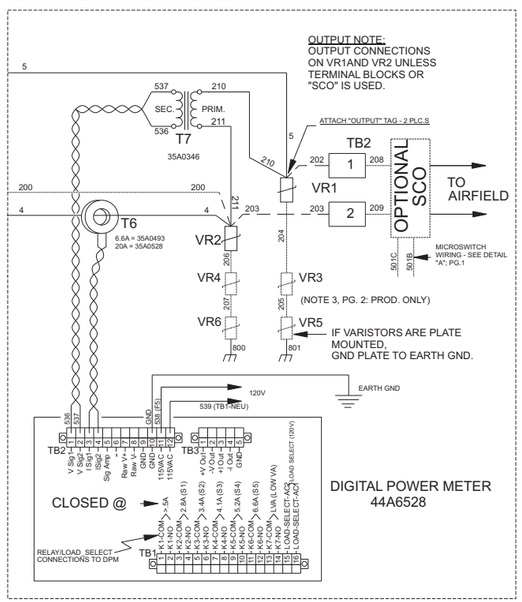

100 SERIES WIRES: PRIMARY POWER, 600V, 105°C

POWER	208 V	220 V	240 V	347V	480 V
4 kW	12 AWG 89A0184/9		12 AWG 89A0184/9	12 AWG 89A0184/9	12 AWG 89A0184/9
7.5 kW	8 AWG 89A0196/9		8 AWG 89A0196/9	8 AWG 89A0196/9	8 AWG 89A0196/9
10 kW	8 AWG 89A0196/9		8 AWG 89A0196/9	8 AWG 89A0196/9	8 AWG 89A0196/9
15 kW	4 AWG 89A0198/9		6 AWG 89A0197/9	6 AWG 89A0197/9	6 AWG 89A0197/9
20 kW	1/0 AWG 89A0201/9		2 AWG 89A0199/9	2 AWG 89A0198/9	6 AWG 89A0197/9
30 kW	1/0 AWG 89A0201/9		2 AWG 89A0199/9	2 AWG 89A0198/9	6 AWG 89A0197/9

300 SERIES WIRES:
TANK LOOP;
600V, 105°C

POWER	ALL
4 kW	10 AWG 89A0195/9
7.5 kW	10 AWG 89A0195/9
10 kW	6 AWG 89A0197/9
15 kW	6 AWG 89A0197/9
20 kW	2 AWG 89A0199/9
30 kW	2 AWG 89A0199/9

WIRE & ASSEMBLY NOTES:

xi-2,I2;1. ADD APPROPRIATE JUMPER WHERE REQUIRED (NO JUMPER IS 6.6A, 5-STEP). TIE ALL JUMPERS INTO CABLE HARNESS SO CONNECTOR HAS TO BE PULLED FROM PCB WHEN REPLACING PCB.

i0,I0;2. WIRE SIZES:
100-105: PRIMARY POWER, SEE TABLE.
200-213: HIGH VOLTAGE, 12AWG, 25KV, 150°C, 89A0086/1.
300-303: TANK LOOP, SEE TABLE.
400-409: MEDIUM CURRENT, 12AWG, 600V, 105°C, 89A0185/9
500-535: STD CONTROL, 18AWG, 600V, 105°C, 89A0182/9.
800-804: GROUND, 12AWG, 600V, GN/YL, 89A163/5.

i-2,I2; 900-905: GROUND, 18AWG, 600V, GN/YL, 89A0163/7.
3. SEE BILL OF MATERIALS FOR NUMBER OF MOV's OR SURGE SUPPRESSORS IN EACH LEG.

i0,I0;4. USE INDIVIDUAL WIRES TO EACH CAPACITOR BANK.

i-2,I2;5. IF A JUMPER WIRE IS REQUIRED FOR ANY CORE LEAD, USE HIGH VOLTAGE 89A0086/1 WIRE.
6. GROUNDING NOTES:
- GND EACH PANEL TO THE FRAME.
- JUMPER INTERNAL GND LUG TO EXTERNAL GND LUG.
7. USES POWER WIRE KIT # 94A0561/XXXX.

SCR PART NO.S PER CCR KW RATING					
4 KW	7.5 KW	10 KW	15 KW	20 KW	30 KW
28A0056	28A0056	28A0056	28A0057	28A0055	28A0054

CCR INPUT VOLTAGE	INPUT PWR FUSES, F1 & F2, PER CCR INPUT VOLTAGE & CCR KW RATING						TX. T4 FUSES, F3 & F4 RATINGS	
	4 KW	7.5 KW	10 KW	15 KW	20 KW	30 KW	4-10 KW	15-40 KW
208/220V	30A, 250V	50A, 250V	70A, 250V	110A, 250V	125A, 250V	200A, 250V	2A, 250V	NA
240V	25A, 250V	45A, 250V	60A, 250V	80A, 250V	110A, 250V	175A, 250V	2A, 250V	NA
347/480V	12A, 600V	25A, 600V	30A, 600V	50A, 600V	60A, 600V	90A, 600V	1A, 500V	3A, 500V

DOC. NO.	DESCRIPTION
44A6136/1-/2	FERRO CNTRL. PNL. WIRE HARNESS, SM. & MED./LG. FRAME
44A6139/1-/2	FERRO/ACE WIRE HARNESS, SM. & MED./LG. FRAME
94A0561/XXXX	POWER WIRE KIT, "IXT" FERRO CCR
43A3128	WIRING DIAGRAM, ACE2 TO URCII/1 PCB

RELATED DOCUMENTS

CONTROLLED COPY
Unauthorized reproduction of this copyrighted material or part is prohibited.
Initialed in RED ink below indicates authorized copy.
INITIAL & DATE:

ADB Airfield Solutions
6577 Chain Drive, Columbus, Ohio 43213
Telephone: 614-861-1304, Fax: 614-864-2069

ASSOCIATED DRAWINGS
DRAWN BY: BE
DRAWN DATE: 23 FEB 10

All information contained herein, including illustrations, specifications, and dimensions, is believed to be reliable as of the date of this publication, but is subject to change without notice. ADB Airfield Solutions makes no representations or warranties for its products and assumes no responsibility for these modifications. No products are to be modified or altered without prior written approval of ADB Airfield Solutions, unless otherwise agree to in writing.
Copyright © 2009 ADB Airfield Solutions

REV LEVEL	REVISION DESCRIPTION	DRAWN BY	REV DATE
G	SEE ECO-2973; CORRECTED T1 TAP WIRING	BE	09NOV10
F	ECO-2921: Removed "ALWAYS USED" J5 Jumper	BE	14OCT10

REV LEVEL	REVISION DESCRIPTION	DRAWN BY	REV DATE
E	ECO-2868; 4KW "100" WIRE NOW 12AWG	BE/SR	16SEP10
D	SEE ECO's 2868 & 2869	BE	10SEP10
C	SEE ECO-2719; CORRECTED TYPO IN NOTE 4	BE	11AUG10
B	SEE ECO-2719; WIRE GA. & FB WIRE CHG'S	SR/BE	20JUL10
A	SEE ECO-2526	BE	23FEB10

DRAWING TITLE:
WIRING DIAGRAM, L-828 W/URC, 4 TO 30KW, "CHF" REGULATOR WITH "IXT" CORE, 6.6A & 20A, SIGNATURE SERIES

REV: G

DRAWING NUMBER: 43A3736

© 2010 ADB Airfield Solutions All Rights Reserved

Schematics

Figure 45: Ferroresonant L828/L829, 50-70kW, Internal Wiring Schematic (43A3736/5070 1 of 1)

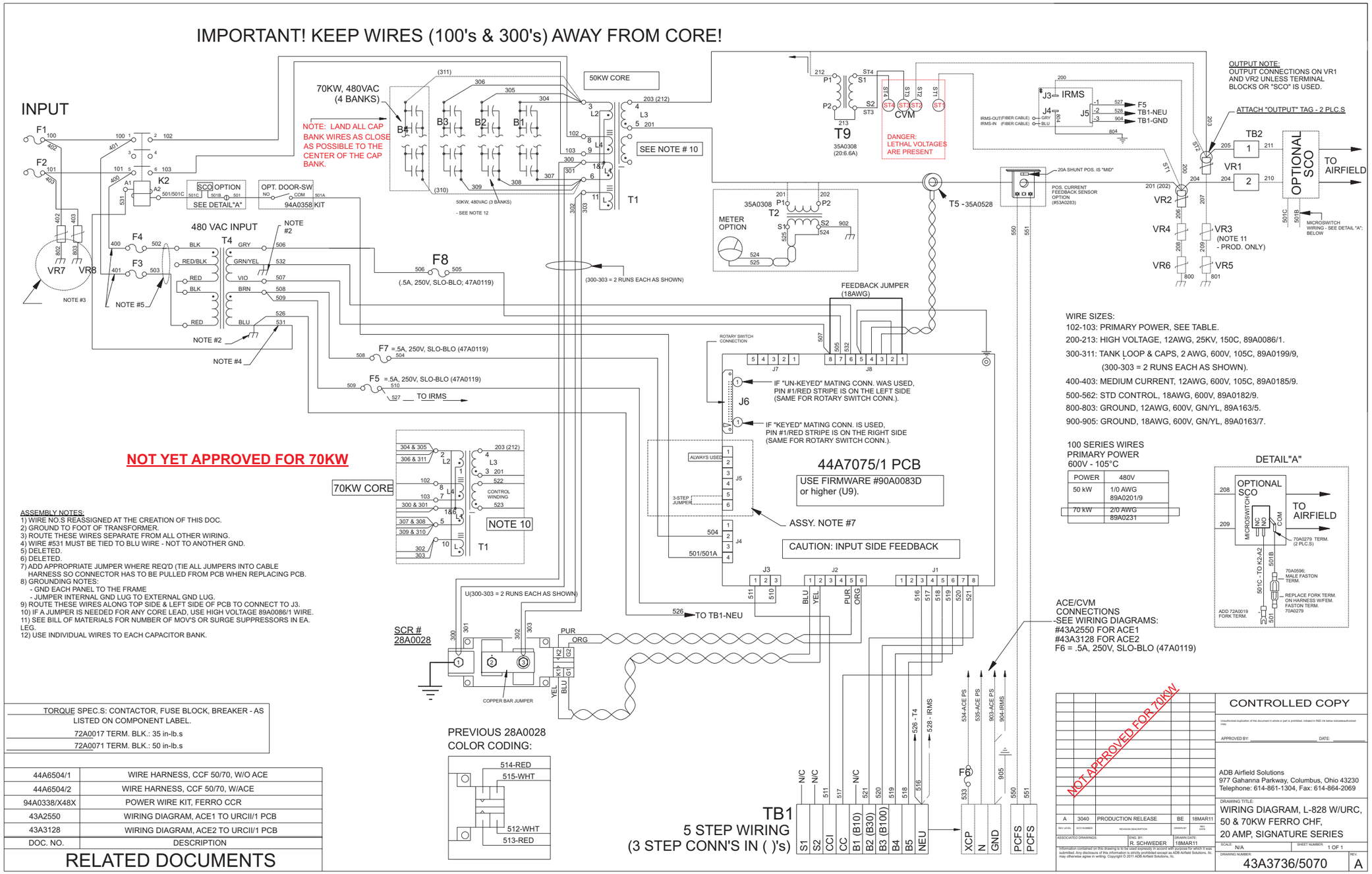

© 2010 ADB Airfield Solutions All Rights Reserved

Figure 46: Powerpack 5-30kW 43A2616 1 of 2

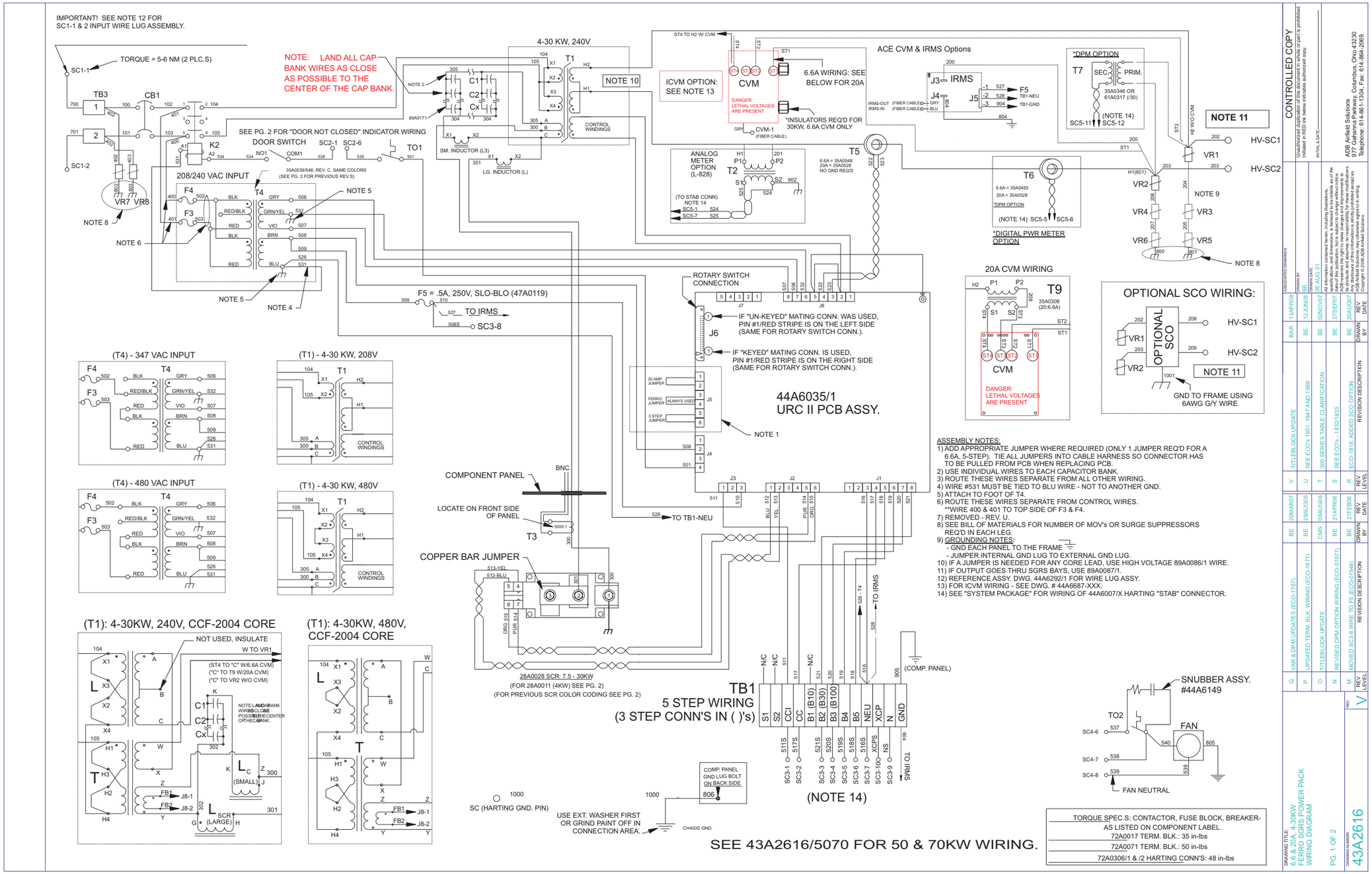

© 2010 ADB Airfield Solutions All Rights Reserved

Schematics

Figure 47: Powerpack 5-30kW 43A2616 page 2 of 2

REV'S A & B - SUPPLY TX LEAD COLORS

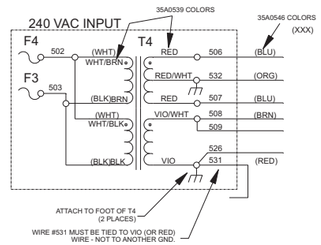

(T4) - 480 VAC INPUT

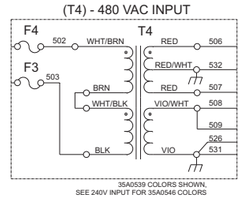

POWER PAK WIRING FOR 94A0399 "DOOR NOT CLOSED" INDICATOR

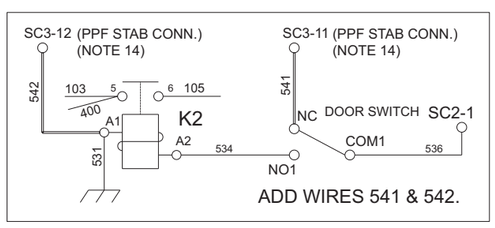

ALL REGULATORS

100 SERIES WIRES - PRIMARY POWER, 600V, 105°C

POWER	480 V
4 kW	10AWG 89A0195/9
7.5 kW	10AWG 89A0195/9
10 kW	10AWG 89A0195/9
15 kW	10AWG 89A0195/9
20 kW	6AWG 89A0197/9
30 kW	6AWG 89A0197/9

300 SERIES WIRES: TANK LOOP, 600V, 105°C

USTD. REGULATORS

POWER	ALL V's
4 kW	10AWG 89A0195/9
7.5 kW	8AWG 89A0196/9
10 kW	8AWG 89A0196/9
15 kW	2AWG 89A0199/9
20 kW	2AWG 89A0199/9
30 kW	2AWG 89A0199/9

UCCF-2004 REGULATORS

POWER	ALL V's
—	—
7.5 kW	8AWG 89A0196/9
10 kW	8AWG 89A0196/9
15 kW	6AWG 89A0197/9
20kW	TBD
30kW	TBD

SEE 43A2616/5070 FOR 50 & 70KW WIRING.

NOTES:
1. WIRE NUMBERS REASSIGNED AT THE CREATION OF THIS DOCUMENT.
2. WIRE SIZES:
   100-105: PRIMARY POWER, SEE TABLE.
   200-210: HIGH VOLTAGE, 12AWG, 25KV, 150C, 89A0086/1.
   300-305: TANK LOOP, SEE TABLE.
   400-409: MEDIUM CURRENT, 12AWG, 600V, 105C, 89A0185/9.
   500-547: STD CONTROL, 18AWG, 600V, 89A0182/9.
   600- HIGH VOLTAGE 8AWG, 7.5KV, SIL, 89A0202: OBSOLETE - USE "200" SERIES WIRE.
   700-701: PRIMARY POWER, 6AWG, 600V, 105C, 89A0230.
   800-806: GROUND, 12AWG, 600V, GRN/YEL, 89A163/5.
   900-905: GROUND, 18AWG, 600V, GRN/YEL, 89A0163/7.
   1000-01: GROUND, 6AWG, 600V, GRN/YEL, 89A0168/5.

DOC. NO.	DESCRIPTION
43A2550	WIRING DIAGRAM, ACE1 TO URCII/1 PCB
43A3128	WIRING DIAGRAM, ACE2 TO URCII/1 PCB
43A2616/5070	WIRING DIAGRAM, SGRS 50 & 70KW
44A6293	FERRO SGRS WIRE HARNESS, 4-30KW, 6.6 & 20A
94A0368/1	POWER WIRE KIT, FERRO SGRS, 4KW
94A0368/2	POWER WIRE KIT, FERRO SGRS, 7.5 & 10KW
94A0368/3	POWER WIRE KIT, FERRO SGRS, 15KW
94A0368/4	POWER WIRE KIT, FERRO SGRS, 20 & 30KW

RELATED DOCUMENTS

PREVIOUS IRMS W/RES WIRING

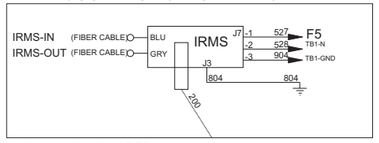

Use wrench to hold RES when attaching wires

PREVIOUS "MOLDED" STYLE CVM WIRING

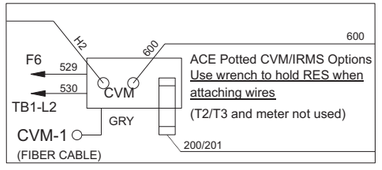

PREVIOUS SCR WIRE COLOR CODING

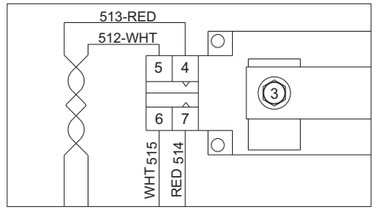

28A0011 SCR (4KW)

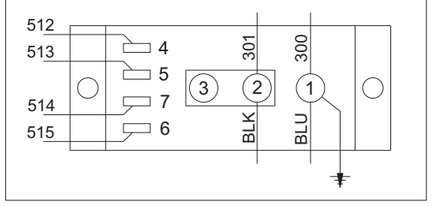

CONTROLLED COPY
Unauthorized use of this drawing or any part is prohibited. Initialed in RED ink below indicates authorized copy.
INITIAL & DATE:

ADB Airfield Solutions
977 Gahanna Parkway, Columbus, Ohio 43230
Telephone: 614-861-1304, Fax: 614-864-2069

REV LEVEL	REVISION DESCRIPTION	DRAWN BY	REV DATE
V	TITLEBLOCK UPDATE	BAR	13APR09
U	SEE ECO's 1851, 1947 AND 1968	BE	12JUN08
T	300 SERIES TABLE CLARIFICATION	BE	02NOV07
S	SEE ECO's - 1832/1833.	BE	27SEP07
R	ECO-1818: ADDED SCO OPTION	BE	20AUG07
Q	VAR & DPM UPDATES (ECO-1797)	BE	20MAR07
P	UPDATED TERM. BLK. WIRING (ECO-1671)	BE	29AUG06
O	TITLEBLOCK UPDATE	CMS	08AUG06
N	REVISED DPM OPTION WIRING (ECO-01971)	BE	21APR06
M	MOVED SC3-8 WIRE TO F5 (ECO-01546)	BE	21FEB06

ASSOCIATED DRAWINGS:
Drawn BY: BE
Drawing DATE: 08 AUG 01

All dimensions contained herein, including illustrations, specifications and dimensions, is believed to be reliable as of the date of this publication, but is subject to change without notice. ADB Airfield Solutions assumes no responsibility for these modifications. Any product or part purchased from ADB Airfield Solutions is the products and assumes no responsibility for these modifications. ADB Airfield Solutions may otherwise agree to in writing.
Copyright © 2006 ADB Airfield Solutions.

DRAWING TITLE:
6.6 & 20A, 4-30KW
FERRO SGRS POWER PACK
WIRING DIAGRAM

PG. 2 OF 2

DRAWING NUMBER:
43A2616

REV: V

Schematics

Figure 48: Powerpack 50-70kW 43A2616/5070 page 1 0f 2

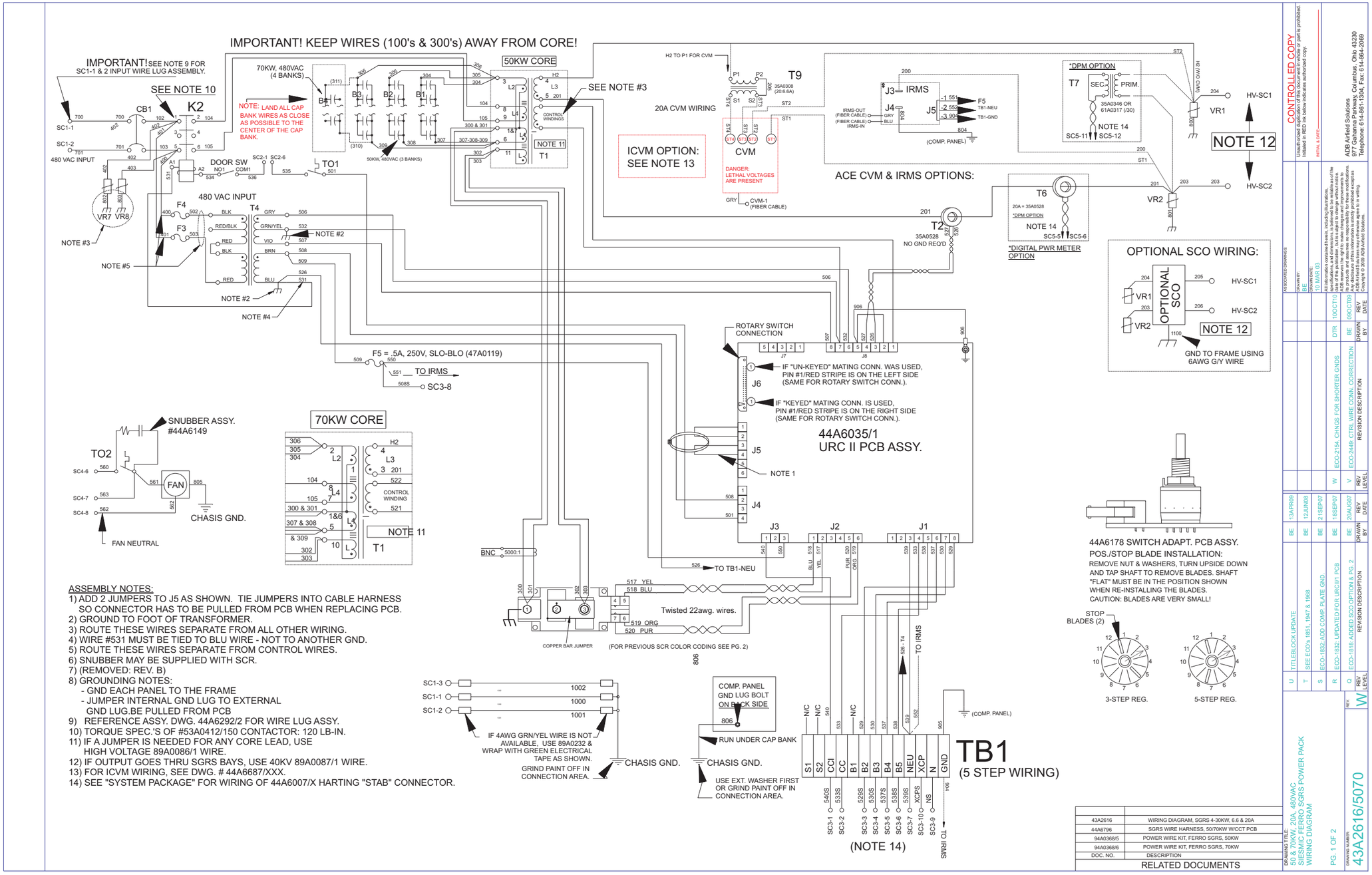

© 2010 ADB Airfield Solutions All Rights Reserved

Schematics

Figure 49: Powerpack 50-70kW 43A2616/5070 page 2 of 2

POWER PAK WIRING FOR 94A0399 "DOOR NOT CLOSED" INDICATOR

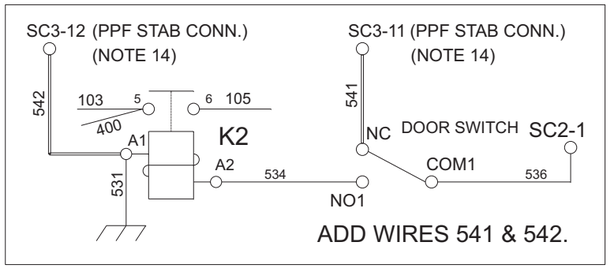

TORQUE SPEC.S: CONTACTOR, FUSE BLOCK, BREAKER - AS LISTED ON COMPONENT LABEL.
72A0017 TERM. BLK.: 35 in-lbs
72A0071 TERM. BLK.: 50 in-lbs
72A0306/1 & /2 HARTING CONN'S: 48 in-lbs

WIRE SIZES:
102-105: PRIMARY POWER, SEE TABLE.
200-206: HIGH VOLTAGE, 12AWG, 25KV, 150C, 89A0086/1.
300-311: TANK LOOP & CAPS, 2 AWG, 600V, 105C, 89A0199/9 (300-303 = 2 RUNS AS SHOWN).
400-409: MEDIUM CURRENT, 12AWG, 600V, 105C, 89A0185/9.
500-562: STD CONTROL, 18AWG, 600V, 89A0182/9.
600-604: HIGH VOLTAGE, 8AWG, 7.5KV, 89A0202: OBSOLETE - USE "200" SERIES WIRE.
700-701: INPUT POWER, 2/0 AWG, 600V, 105C, 89A0231.
800-806: GROUND, 12AWG, 600V, GN/YL, 89A163/5.
904-906: GROUND, 18AWG, 600V, GN/YL, 89A0163/7.
1000-1004: GROUND, 4 AWG, 600V, 105C, GN/YL, 89A0233.
1100: GROUND, 6 AWG, 600V, 105C, GN/YL, 89A0168/5.

100 SERIES WIRES
PRIMARY POWER
600V - 105°C

POWER	480V
50 kW	1/0 AWG 89A0201/9
70 kW	2/0 AWG 89A0231

PREVIOUS "MOLDED" STYLE CVM WIRING

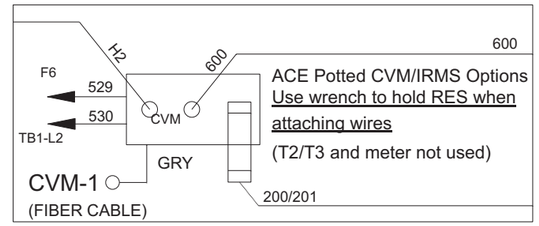

PREVIOUS IRMS W/RES WIRING

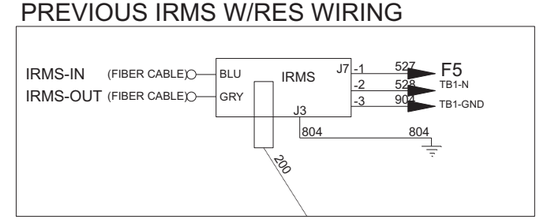

Use wrench to hold RES when attaching wires

PREVIOUS SCR WIRE COLOR CODING

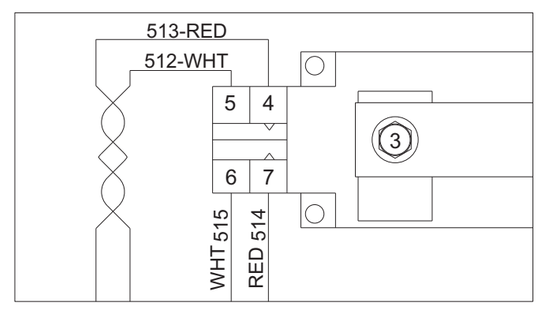

DOC. NO.	DESCRIPTION
43A2616	WIRING DIAGRAM, SGRS 4-30KW, 6.6 & 20A
44A6796	FERRO SGRS WIRE HARNESS, 50 & 70KW SEISMIC
94A0368/5	POWER WIRE KIT, FERRO SGRS, 50KW
94A0368/6	POWER WIRE KIT, FERRO SGRS, 70KW

RELATED DOCUMENTS

DRAWING TITLE: 50 & 70KW, 20A, 480VAC SIESMIC FERRO SGRS POWER PACK WIRING DIAGRAM

PG. 2 OF 2

DRAWING NUMBER: 43A2616/5070 REV: W

REV LEVEL	REVISION DESCRIPTION	DRAWN BY	REV DATE
U	TITLEBLOCK UPDATE	BAR	13APR09
T	SEE ECO's 1851, 1947 & 1968	BE	12JN08
S	ECO-1832: ADD COMP. PLATE GND.	BE	21SEP07
R	ECO-1832: UPDATED FOR URCIII PCB	BE	18SEP07
Q	ECO-1818: ADDED ECO OPTION & PG. 2	BE	20AUG07
W	ECO-2154: CHASS FOR SHORTER GNDS	BE	09OCT09
V	ECO-2449: CTRL WIRE CONN. CORRECTION	BE	01OCT10

DRAWN BY: BE
DRAWN DATE: 10 MAR 03

CONTROLLED COPY
Unauthorized duplication of this document in whole or part is prohibited. Revised in REDLINE via Adobe indicates authorized copy.

REVISION DATE

All information contained herein, including illustrations, specifications and dimensions, is believed to be accurate as of the date of this publication, but is subject to change without notice. ADB Airfield Solutions assumes no responsibility for the use of its products and assumes no responsibility for these modifications. Any product or part of any product that has been changed or altered in any manner from its original design and specification as ADB Airfield Solutions may otherwise agree to in writing.
Copyright © 2009 ADB Airfield Solutions.

ADB Airfield Solutions
977 Gahanna Parkway, Columbus, Ohio 43230
Telephone: 614-861-1334, Fax: 614-864-2069

Schematics

© 2010 ADB Airfield Solutions All Rights Reserved

Registered office:

ADB Airfield Solutions LLC
977 Gahanna Parkway
Columbus, OH 43230
USA
Phone: +1 (614) 8611 304
Fax: +1 (614) 8642 069

Other addresses:

ADB Airfield Solutions Ltd.
5500 North Service Road, Suite 1108
Burlington, Ontario L7L 6W6
Canada
Phone: +1 (905) 331 6887
Fax: +1 (905) 331 9389

ADB Airfield Technologies Ltd.
01A Unit, 9F, LSH Plaza
8, Wangjing Jie
Chaoyang District
Beijing 100102
P.R. China
Phone: +86 10 8476 0106
Fax: +86 10 8476 0090

ADB N.V.
Dubai Silicon Oasis
Wing D - Office D-309
P.O. Box 341218
United Arab Emirates
Phone: + 971 4372 4970
Fax: + 971 4372 4975

ADB N.V./S.A.
39/47 Boulevard Ornano
93200 Saint-Denis
France
Phone: +33 (1) 4922 9250
Fax: +33 (1) 4922 9255

ADB Airfield Solutions GmbH & Co. KG
Von-der-Tannstr. 31
90439 Nürnberg
Germany
Phone: +49 (911) 9239 1287
Fax:+49 (911) 2852 582

ADB N.V.
Asia Pacific Regional HQ
Unit C-9.3.1, Level 9, Block C
Mines Waterfront Business Park
No. 3, Jalan Tasik
The Mines Resort City
43300 Seri Kembangan Selangor
Malaysia
Phone: +603 8941 4868
Fax: +603 8942 4869

ADB Airfield Solutions Netherlands
Prinses Beatrixlaan 614
Office D3.14
2595 BM Den Haag
The Netherlands
Phone: +31 (0)70 304 3611
Fax: +31 (0)70 333 8094

ADB Airfield Solutions, Ltd.
2nd Floor, 3 Rivonia Village
Cnr Mutual Road and Rivonia Boulevard
South
Rivonia 2128
South Africa
Phone: +27 (11)234 6768
Fax: +27 (11)234 6739

ADB
Unit 44, Business Innovation Centre
Binley Business Park
Harry Weston Road
Coventry, CV3 2TX
United kingdom
Phone: +44 (0)1455 883130
Fax: +44 (0)1455 883179

ADB
Airfield Solutions
Leuvensesteenweg 585
B-1930 Zaventem
Belgium
Phone: +32 (2) 722 17 11
Fax: +32 (2) 722 17 64
info.adb@adb-air.com
www.adb-air.com

ADB Airfield Solutions USA

977 Gahanna Pkwy
Columbus, Ohio 43230 USA
Telephone: (+1 614-861-1304)
Fax: +1 614-864-2069
www.adb-airfieldsolutions.com

The information contained in this document is subject to change without notice. ADB reserves the right to make changes and improvements to its products and assumes no responsibility for making these modifications on any equipment previously sold.

96A0408 © 2010 ADB Airfield Solutions All Rights Reserved

Document Date (12/2010)